AT27

MEDIUM-VOLTAGE EQUIPMENT

May, 2021

TRIOL

ELEGANT AND FUNDAMENTAL INDUSTRIAL SOLUTIONS

WWW.TRIOLCORP.COM

AT.654227.430 IM

AT27 ED, DD, MV lines Installation manual

Dear owner of Triol equipment!

We are very glad that you have purchased a Triol AT27 variable frequency drive. We are sure that this equipment will bring profit to your enterprise, as well as provide safe and reliable control of the technological process.

We strongly recommend that you carefully read the operational documentation before carrying out any operations with the variable frequency drive.

List of operational documentation for AT27 line ED, DD, MV:

1. Installation manual
2. Operation manual
3. Programming manual
4. Registration certificate

Equipment specifications, as well as the warranty conditions of the variable frequency drive are specified in the registration certificate.

We recommend that you always follow the instructions in the service book. After all, only timely and properly serviced equipment will operate its service life and even longer.

Best regards, Triol Corporation

List of Abbreviations

The following abbreviations and designations are used in the text of the document:

VFD (VFD AT27) - Variable frequency drive AT27 ED, DD, MV lines;

Power cell AT27;

Power cell compartment

transformer compartment

switching compartment

Control system compartment

UPS - Uninterruptible power supply

transformer cabinet

power cell cabinet

Spare parts

UMKA-27

Control system

IM - Installation manual

switchgear

Introduction

Triol AT27 is a Variable Frequency Drive, based on a multilevel cascade inverter, designed to control three-phase induction electric motors of 3-11 kV Voltage and capacity of 160-8000 kW.

Before starting mounting of the VFD AT27 equipment, please read this IM carefully. Violation of the rules of installation of the equipment can lead to damage of the product, damage to the equipment connected to it, reduction of its performance characteristics, service life in general, to the withdrawal of the warranty on the equipment.

This IM should be kept with the VFD for the entire service life of the VFD.

Purpose of the document

The present document contains the information and requirements for transportation, installation, mounting and assembly of Variable Frequency Drive AT27 ED, DD, MV lines.

1. General safety instructions

1.1 General warnings

This section contains safety instructions that must be followed when mounting the VFD. Failure to follow the safety instructions may result in injury to persons and damage to the VFD, the motor and the connected process equipment.

Read the safety instructions carefully before working on the VFD.

The following warnings, precautions, and notes are intended to ensure the safety of the user and to prevent damage to the product.

Please read this information carefully, as this will ensure your personal safety and the longevity of the VFD.

Disregarding the warnings in this manual may cause danger to life, serious bodily injury, or serious property damage.

The illustrations and photos in this IM may be shown without covers and protective guards to show the internal parts of the product. Ensure that all covers and protective guards are in place before using or starting up the drive.

Any illustrations, photos or examples used in this IM are for the VFD AT27 ED, DD, MV lines only and may not be used with other Triol Corporation products.

If this IM is lost or damaged, a new copy can be ordered from Triol Corporation through the official website https://triolcorp.com or using the contacts given in the Warranty and Service section.

General Safety Precautions

This IM includes two types of instructions that you should pay special attention to when performing any operation on the Variable Frequency Drive:

Electrical hazard symbol. Failure to follow the warnings associated with this symbol creates the risk of electric shock to Staff and/or damage to the equipment.

Failure to follow the warnings under this symbol creates a hazardous condition that is not related to electrical hazards and can cause serious injury or danger to life and/or damage to the equipment.

WARNING! This IM is intended for personnel involved in unloading, loading, installing and assembling the VFD. Please read this manual before starting any operation described above. In developing this IM, we have assumed that the user is familiar with the handling and installation instructions, basic electrical engineering, electrical components, and wiring diagrams.

WARNING! The VFD is connected to hazardous voltages and operates machinery with rotating mechanical parts, which could be a source of danger. For this reason, ONLY qualified Staff is allowed to carry out the electrical mounting of the VFD Triol AT27

1.2 Safety Requirements

Before you start unloading and installing VFD AT27, please read these safety requirements, IM and work project.

Loading and unloading operations and transportation of cargo must be carried out in accordance with the requirements of local standards, taking into account general safety requirements, labor safety regulations for loading and unloading and placement of cargo.

Loading, unloading and placing of VFD with or without the use of lifting equipment, as well as its installation, described in this IM, must be performed by qualified staff.

The area where the equipment is unloaded from the vehicle must be cordoned off. Warning signs shall be posted in areas where people walk by the equipment.

When loading, unloading and moving the cargo, it is not allowed to use defective lifting machines, hooks, removable lifting devices, carts, other devices and tools.

2 Equipment description

2.1 VFD AT27 ED line

The configuration of VFD AT27 ED line cabinets depends on the mains supply voltage and the number of power cells in a phase.

By design, VFD AT27 ED line are available in two basic configurations:

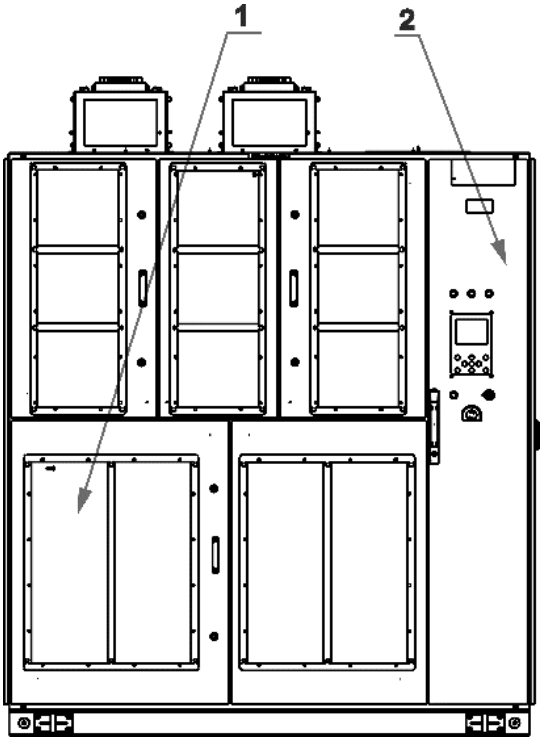

- Single cabinet ("mono cabinet")

1. Transformer and Power cell cabinet
2. Control system compartment

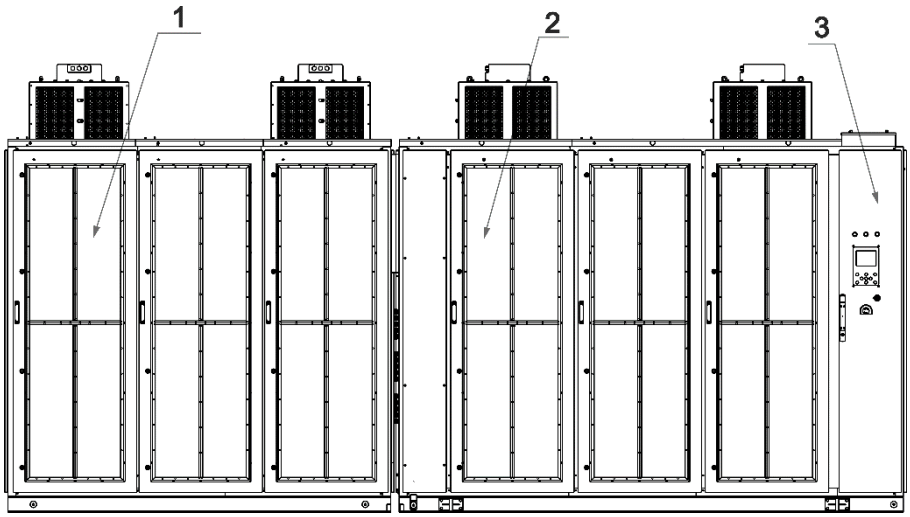

- Double cabinet

1. Transformer cabinet
2. Power cell cabinet
3. Control system compartment

2.2 VFD AT27 DD, MV lines

VFD AT27 DD, MV lines are available in a single cabinet configuration and are divided into compartments according to their functional purpose.

The design of the VFD AT27 DD line:

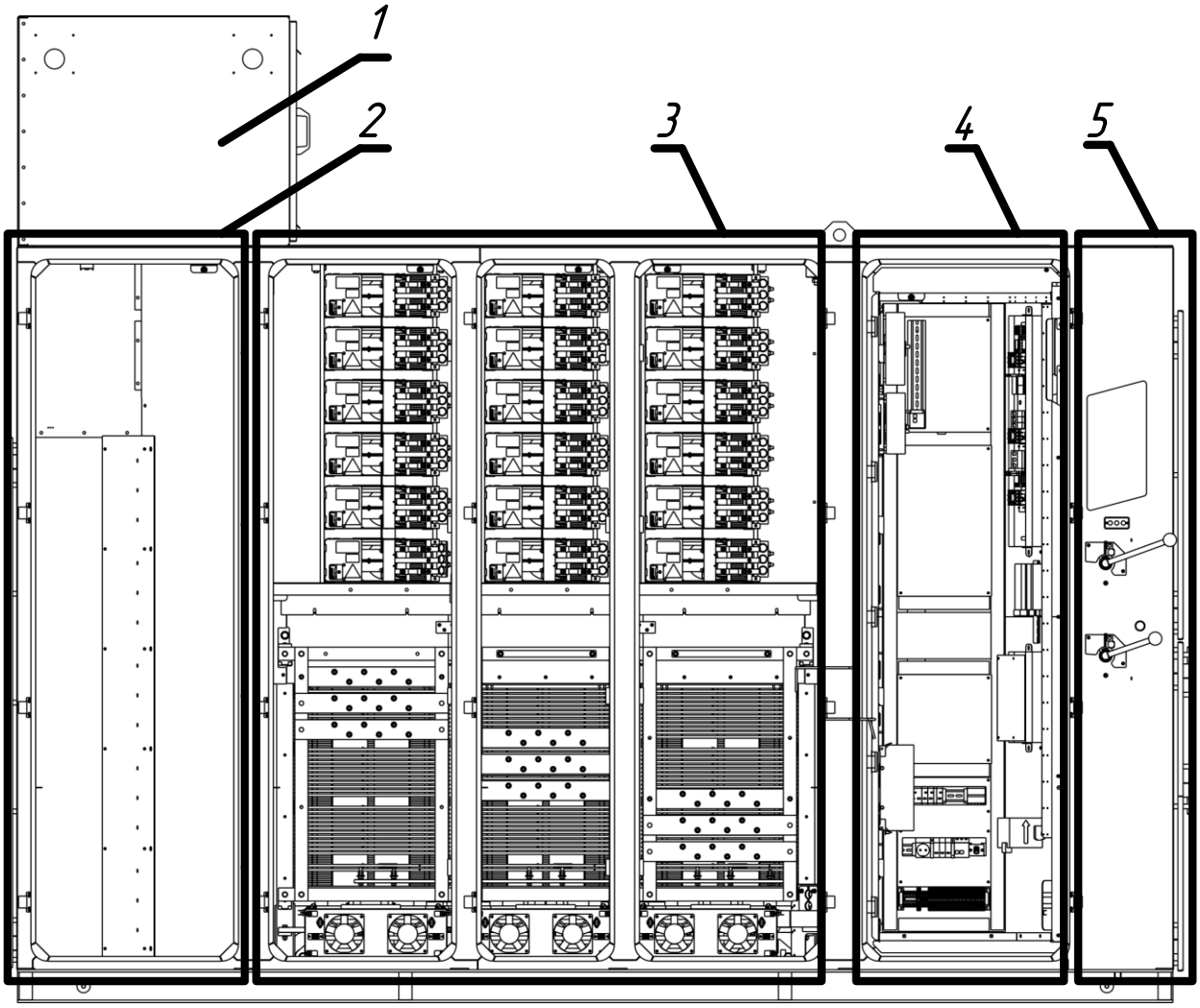

1. Cooling system fan(s);
2. Filtration and air treatment compartment;
3. Transformer and power cell compartment;
4. Control system compartment;
5. Switching compartment.

The design of the VFD AT27 MV line:

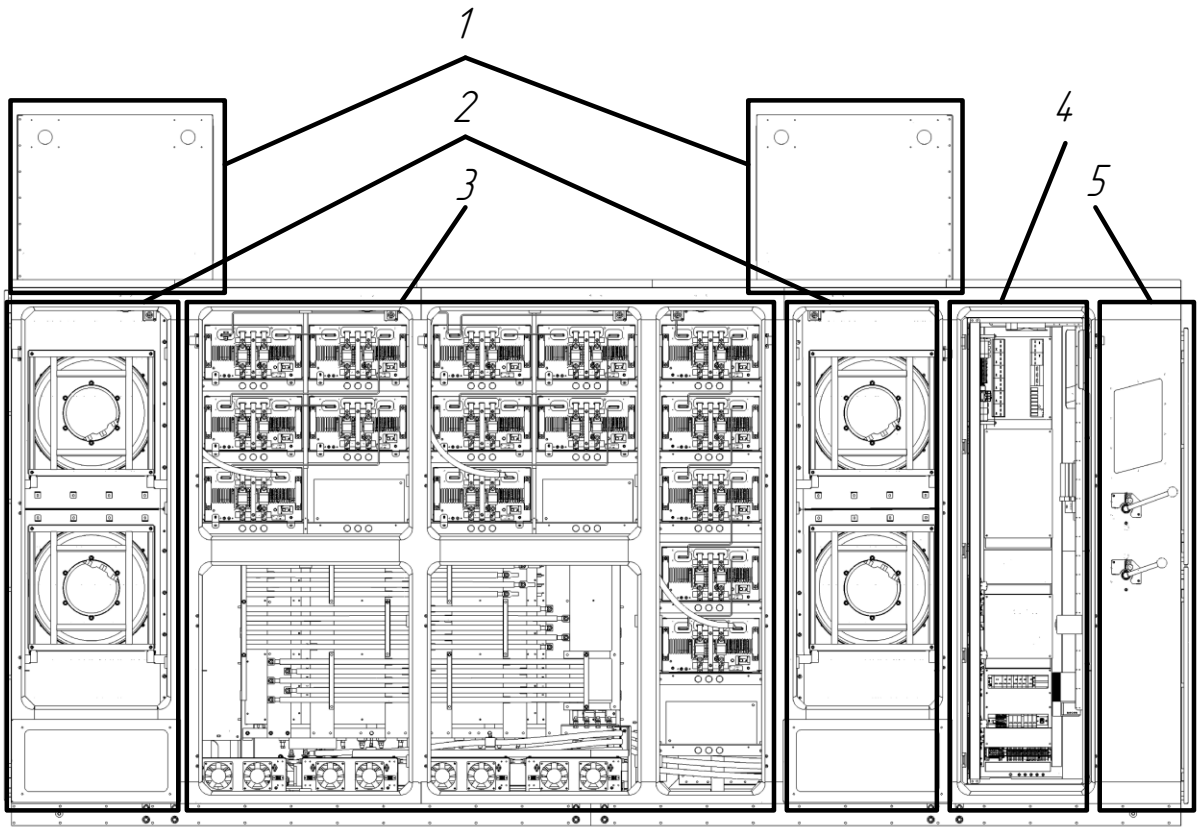

1. Outside contour cooling fan;
2. Heat exchange compartment (heat exchangers and fans of the inside cooling contour);
3. Transformer and power cell compartment;
4. Control system compartment;
5. Switching compartment.

3. Transportation

3.1 Requirements to transportation of VFD AT27 ED line

The VFD package is intended to protect the product from external influences during transportation by water, land and air transport. Necessary protective measures should be taken against water, oils, other chemically active liquids and dirt getting on the package. During transportation and moving the VFD by any kind of transport, it is necessary to avoid possible damages caused by external mechanical impacts and careless handling.

Transport stickers applied on the package reflect the requirements for transportation, loading, unloading and storage conditions of the product. These requirements should be followed during transport operations.

The packaging bears the following handling marks (warning notices):

Fragile. Take care

Top

Protect from moisture

Cargo not stackable

Center of gravity

Sling here

The packaging bears the following information inscriptions:

- Gross and net weight of the package;

- Dimensions of the package.

Information about package items, their quantity and mass and dimensions parameters are indicated in the packing list located on the front side of the package.

Transportation conditions included in the VFD set must comply with the following requirements in terms of mechanical factors:

- Transportation by automotive transport with a number of transloadings not exceeding four. Transportation by cobblestone and unpaved roads should be carried out at a speed of up to 40 km/h.

- Transportation by different vehicles: by air or by rail, together with automotive transport, with a total number of transloadings not exceeding four;

- Transportation, including transportation by sea.

Loading and unloading operations using cranes and lifting machines shall be performed by the workers who have passed special training and knowledge test on labor protection issues and are authorized to perform such works. When performing unloading operations, the general rules for slinging work must be followed.

WARNING! Placement and fastening of the VFD package items in the vehicle must ensure their stable position, exclude the possibility of their displacement and hitting each other, as well as the walls of the vehicle.

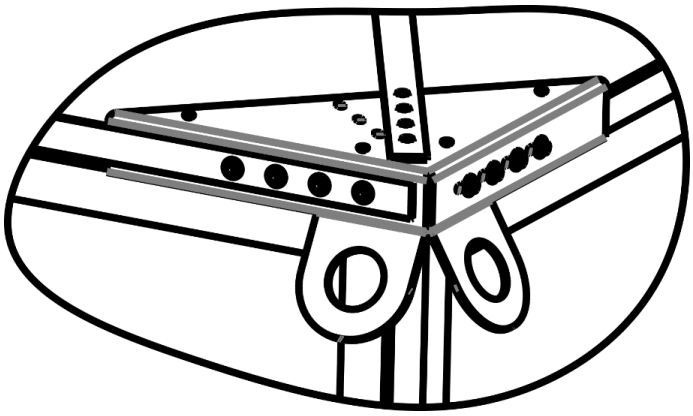

In case of the VFD AT27 ED line, the package item is secured to the trailer or railway platform with slings. For this purpose, special eyelets are provided in the package item.

Securing the VFD AT27 ED line on the railway platform

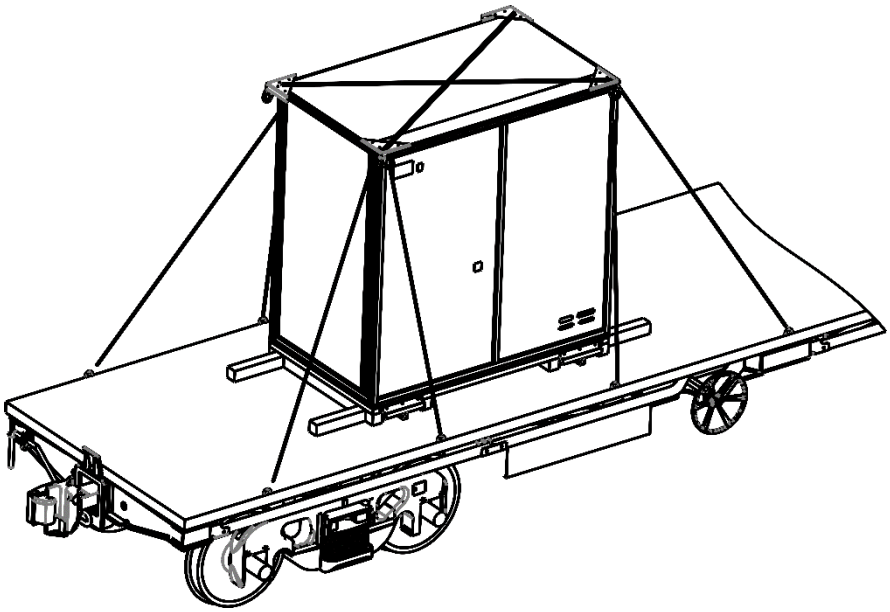

Before placing the cargo on the railway platform, remove the tarpaulin cover from the packaging and stow it in the packaging pocket provided for this purpose. After unfastening the cargo on the railway platform, place the tarpaulin cover on the packaging.

3.2. Requirements for loading and unloading AT27 ED line

WARNING! After unloading, it is necessary to check the complete set of the VFD according to the registration certificate and the number of package items!

Overall dimensions, net and gross weight are shown on the package of each package item. The VFD is unloaded in the original package with a crane of the required lifting capacity.

3.2.1 Unloading requirements for road and rail transport

Unloading of the VFD AT27 ED line cabinets from the car or railway platform is carried out by encircling the cabinet from below with textile slings with load-carrying capacity not less than gross weight of the lifted cargo, as shown in the figure below.

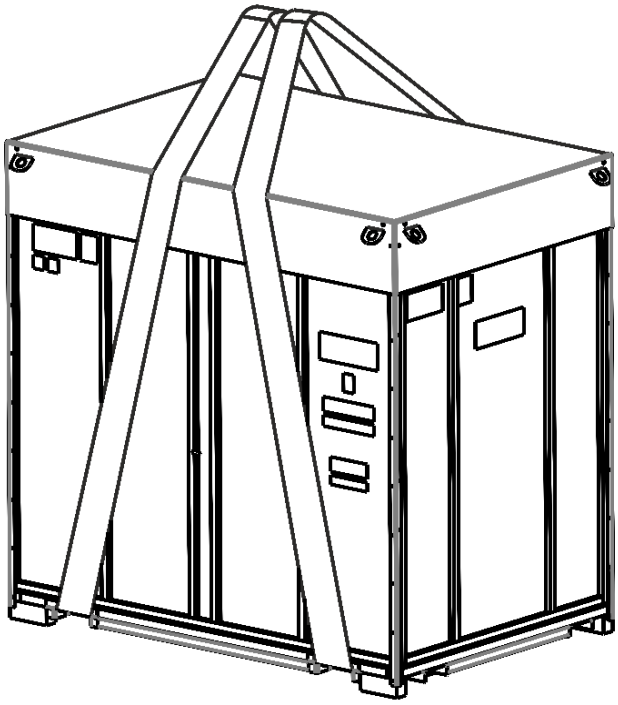

3.2.2 Unloading requirements for shipping container

To unload equipment from a shipping container such as an Open Top, open the top of the container, attach soft slings to the shipping areas, and use a crane to remove the packaged equipment from the container, as shown below.

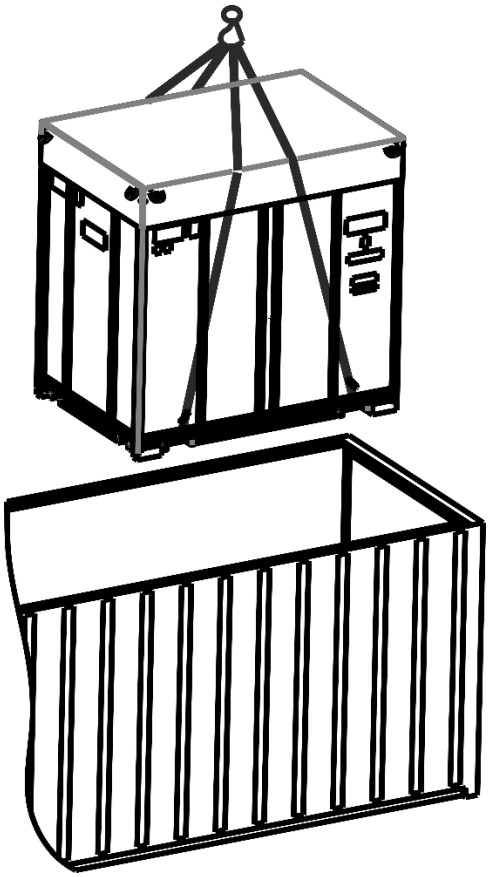

3.3 Requirements for transportation of VFD AT27 DD, MV lines

The VFD package is intended to protect the product from external influences during transportation by water, land and air transport. Necessary protective measures should be taken against water, oils, other chemically active liquids and dirt getting on the package. During transportation and moving the VFD by any kind of transport, it is necessary to avoid possible damages caused by external mechanical impacts and careless handling.

Transport stickers applied on the package reflect the requirements for transportation, loading, unloading and storage conditions of the product. These requirements should be followed during transport operations.

The packaging bears the following handling marks (warning notices):

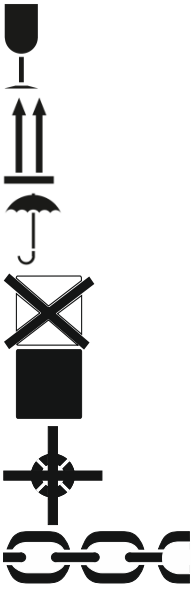

Fragile. Take care

Top

Protect from moisture

Cargo not stackable

Center of gravity

Sling here

The packaging bears the following information inscriptions:

- Gross and net weight of the package;

- Dimensions of the package.

Information about package items, their quantity and mass and dimensions parameters are indicated in the packing list located on the front side of the package.

Transportation conditions included in the VFD set must comply with the following requirements in terms of mechanical factors:

- Transportation by automotive transport with a number of transloadings not exceeding four. Transportation by cobblestone and unpaved roads should be carried out at a speed of up to 40 km/h.

- Transportation by different vehicles: by air or by rail, together with automotive transport, with a total number of transloadings not exceeding four;

- Transportation, including transportation by sea.

Loading and unloading operations using cranes and lifting machines shall be performed by the workers who have passed special training and knowledge test on labor protection issues and are authorized to perform such works. When performing unloading operations, the general rules for slinging work must be followed.

WARNING! Placement and fastening of the VFD package items in the vehicle must ensure their stable position, exclude the possibility of their displacement and hitting each other, as well as the walls of the vehicle.

In case of the VFD AT27 DD, MV lines, the package item is secured on the platform of the vehicle with the force elements in the packaging frame. When securing packages with ropes or chains in the vehicle, the protection and integrity of the package must be ensured.

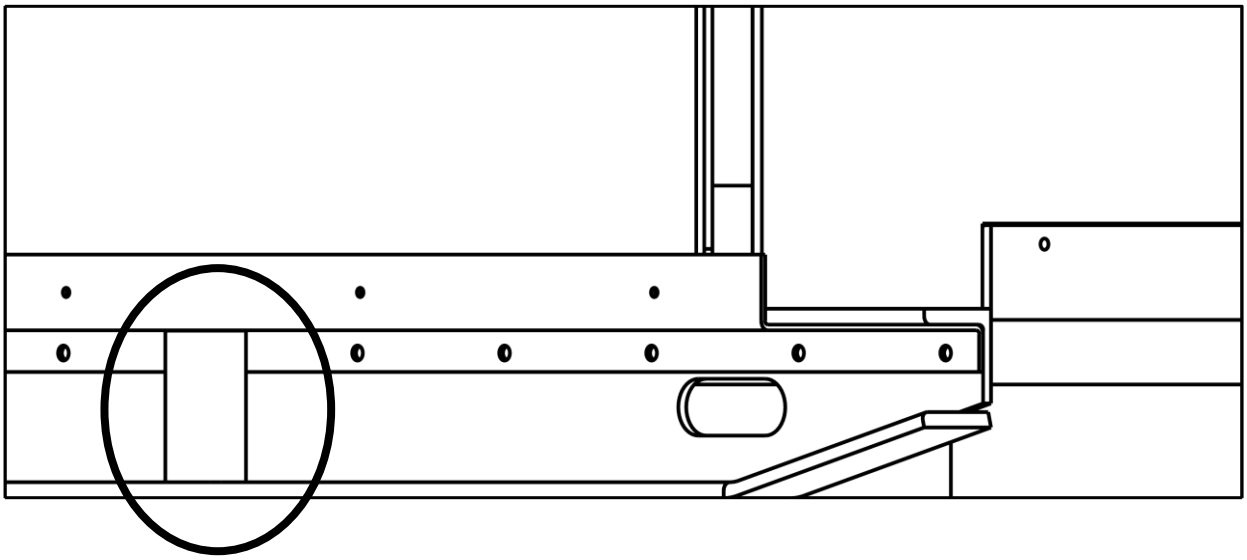

3.3.1 Unloading requirements for road and rail transport

Slinging of the VFD AT27 DD, MV lines is performed by 4 lugs located in the upper part of the item.

Before placing cargo on the railway platform, remove the tarpaulin cover from the packaging and place it in the pocket provided for this purpose. After unfastening the load on the railway platform, place the tarpaulin cover on the package.

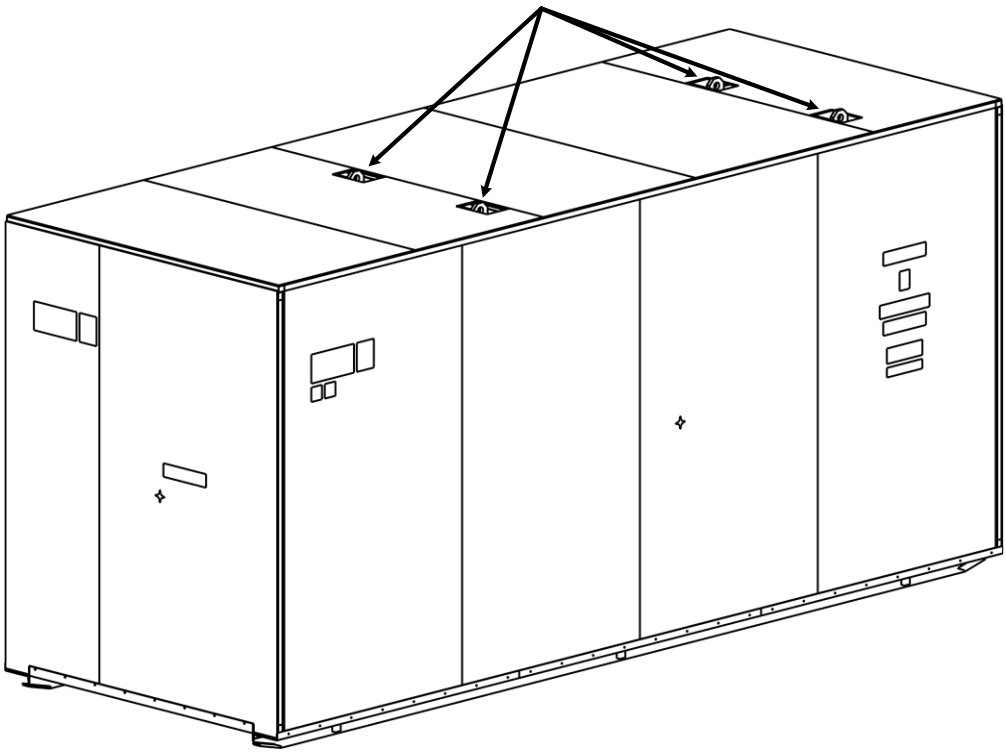

Location of the lifting eyelets for the VFD AT27 DD, MV lines

WARNING! When slinging the VFD AT27 DD, MV lines, be sure to use all 4 strapping attachments located at the top of the VFD cabinet.

WARNING! Do not lift, move or lower the equipment unless there are people at a safe distance from it.

To load/unload the VFD AT27 DD, MV lines, use rigging brackets mounted on the item's eyelets. The load capacity of the rigging bracket must be at least 4 tons and the diameter of the fixing rod must not exceed 34 mm (1.33").

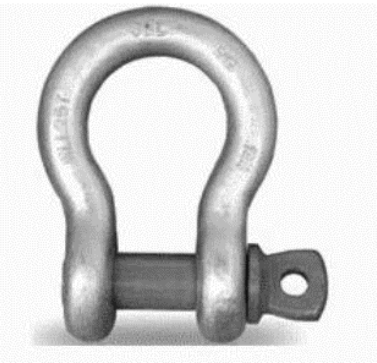

Example of a rigging bracket

When loading/unloading, the angle between sling branches should not exceed 90°.

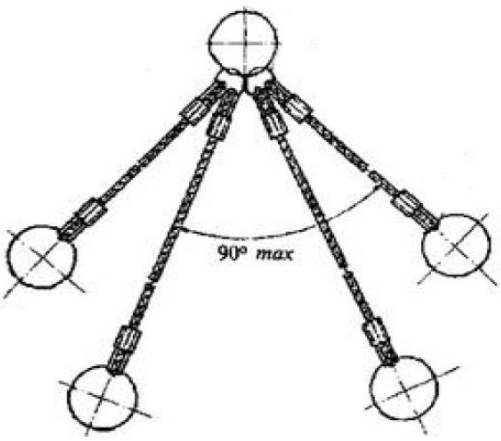

Angle between slings

3.3.2. *Unloading requirements for shipping container*

WARNING! For VFDs AT27 DD and MV lines transportation by sea container with increased height of the "High Cube" type is required.

For loading the VFDs AT27 DD and MV lines into a sea container need to be: Prepare a container for loading products. Install the guides made of a wooden bar with one of the indicated sections (in mm): 50x70, 50x100, 75x100 with the wide side laid on the floor of the container. Maximum deviations when installing the timber shows at the picture.

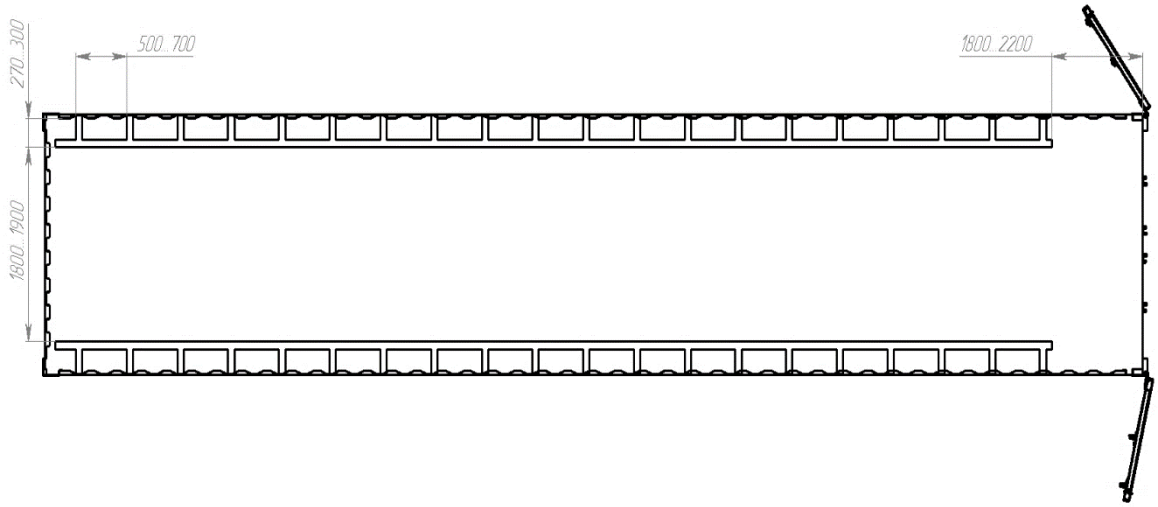

Installation of guides in the container before VFD AT27 of DD or MV lines loading.

WARNING! A shipping container with increased height of the "High Cube" type is required for transporting the VFD AT27 DD, MV lines

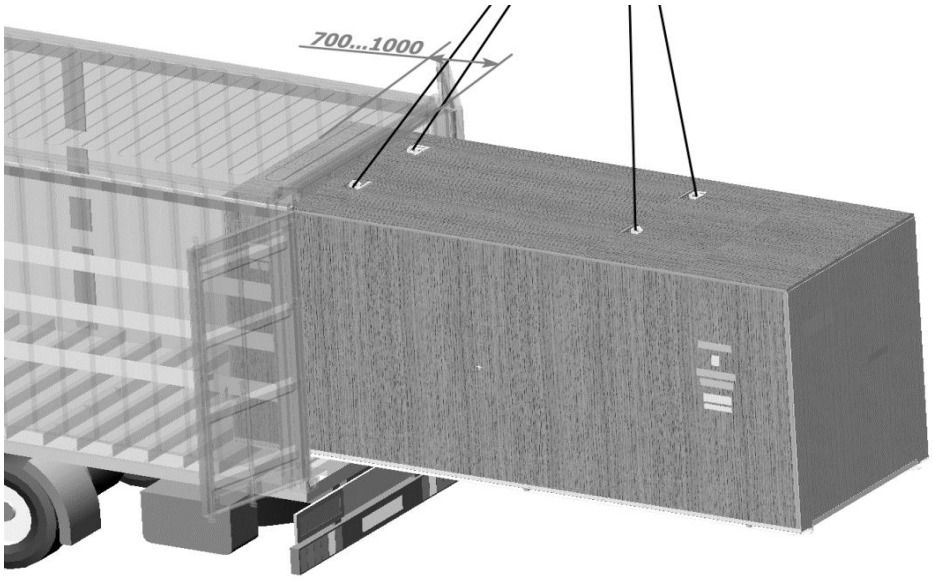

Installation with a crane of the VFD inside the container

- Install the sagging part on the previously prepared supports with a height of about 1450 mm (57") and designed for a total load of at least 7 tons. The item must stand stable without sagging in the corners. After that, remove the crane slings.

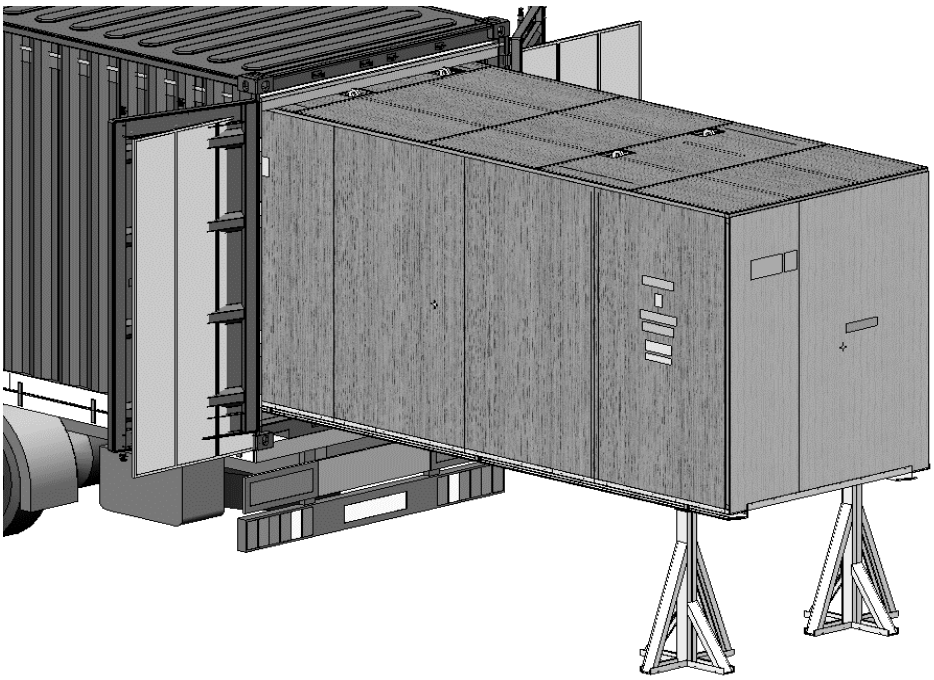

- Install a forklift with a load capacity of at least half the gross weight of the packaged VFD AT27 DD, MV lines on the side of the installed supports.

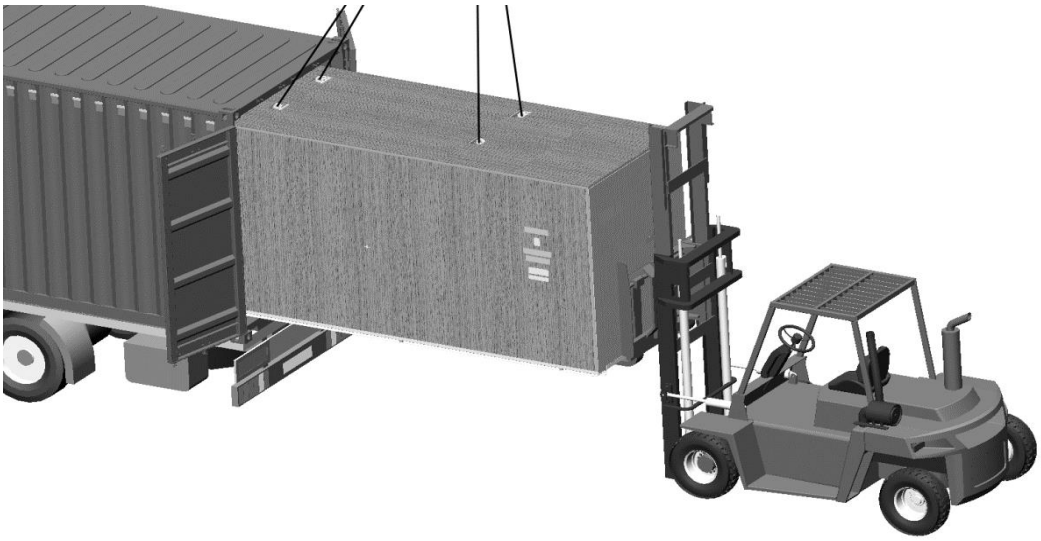

Positioning the forklift when loading the VFD in the container

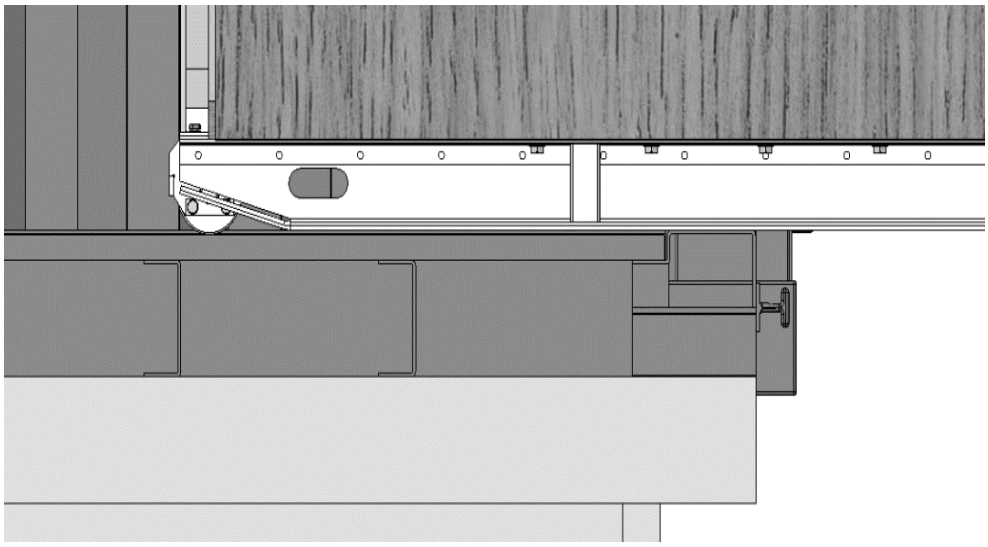

Rollers inside the container

- Use the crane to lower the item onto the forks of the forklift until the slings loosen.

- Dismantle the mounted supports, and then gently drive inside the container to the maximum depth.

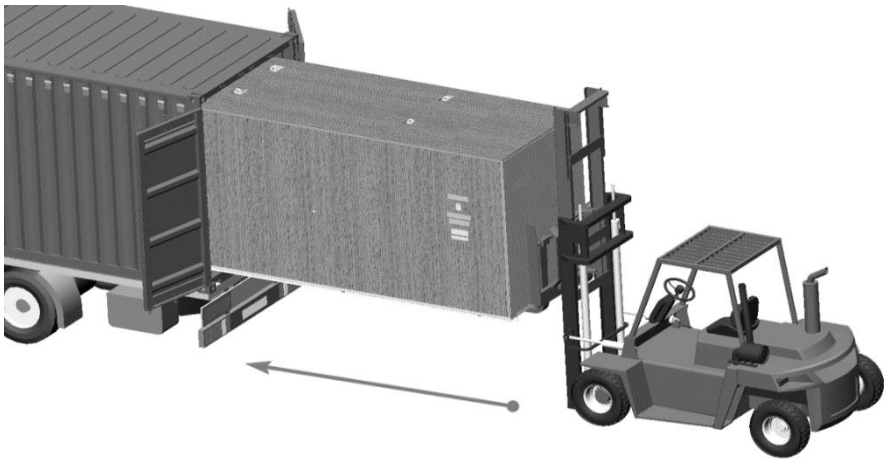

Installation of the item in the container after removal of slings

- Inside the container, use a hydraulic cart with a lifting capacity of at least half the gross weight of the packaged VFD AT27 DD, MV lines, or two hydraulic carts with a lifting capacity of at least a quarter of the gross weight of the packaged VFD AT27 DD, MV lines. Lift the product approximately 90 mm from the container floor.

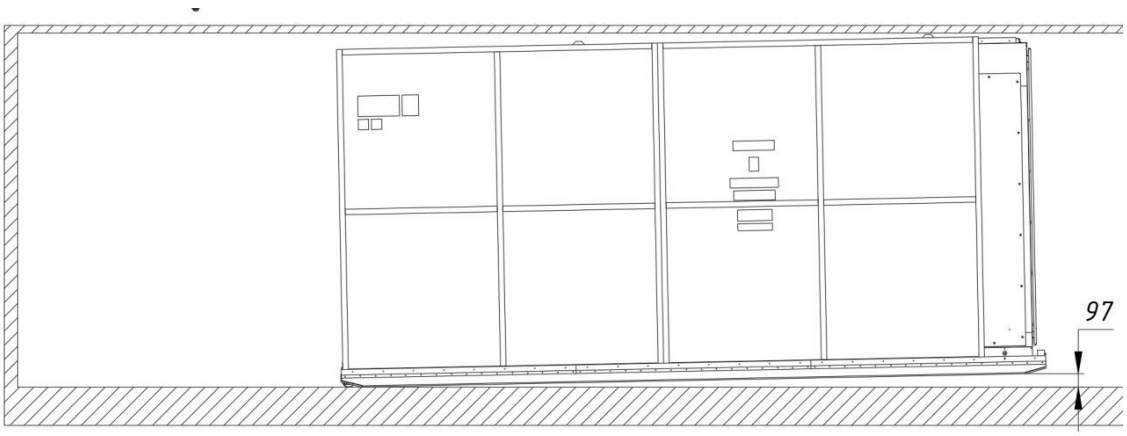

Rollers inside the container

- Push the item in as far as it will go.

- Remove the hydraulic cart.

3.3.3 Unloading requirements for shipping container

To unload the VFD AT27 DD, MV lines from the shipping container, it is necessary to:

- Lift with a forklift with a load capacity of at least half the gross weight of the packaged AT27 on one side and carefully slide the AT27 out of the container so that approximately 700-1000 mm (27" - 40") of the item remains inside the container.

- Secure the crane slings to the rigging brackets installed on the item's eyelets.

- Use the crane to lift the item and then complete the unloading of the AT27 from the container.

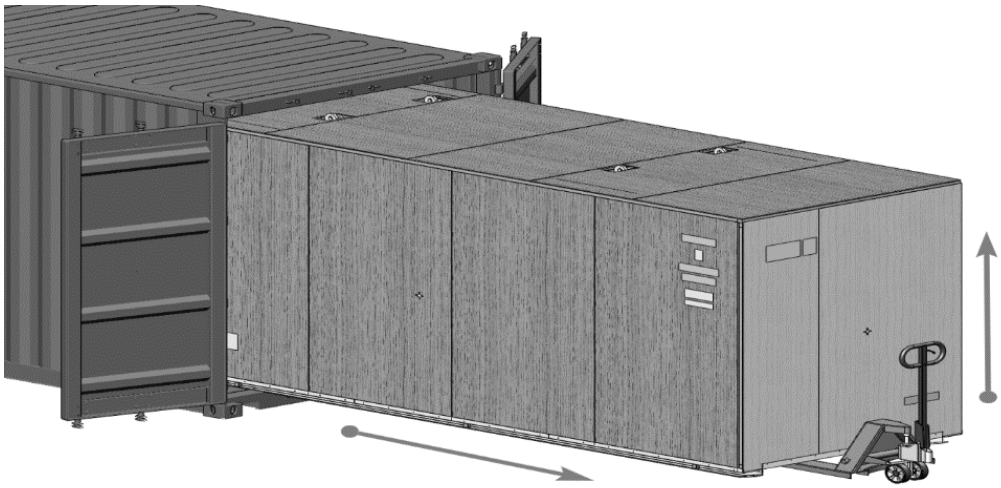

Unloading the VFD AT27 in the package from the shipping container

To roll the AT27 out of the container, you can use the service openings in the bottom of the package, using slings with hooks and a forklift.

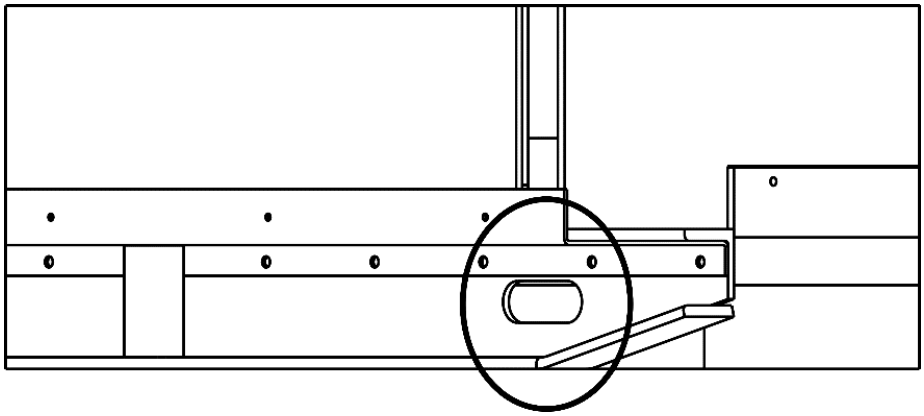

Service openings at the bottom of the package

3.3.4 Loading VFD AT27 in a truck

To load the packed VFD AT27 DD, MV lines into the truck, it is necessary to:

- Unfasten the top of the truck, remove the bracket over the truck gate.

- Remove the transport straps.

- Place the VFD in the truck through the gate.

Warning! Lifting of the VFD AT27 DD, MV lines is carried out in the factory packaging using a crane with a lifting capacity of at least 20 tons

Placement and mounting of the item and delivery set in the vehicle must ensure their stable position, exclude the possibility of displacement and hitting each other, as well as the walls of the vehicle.

Loading the VFD AT27 DD, MV lines into the truck

Secure the item in the truck by the bottom frame of the package.

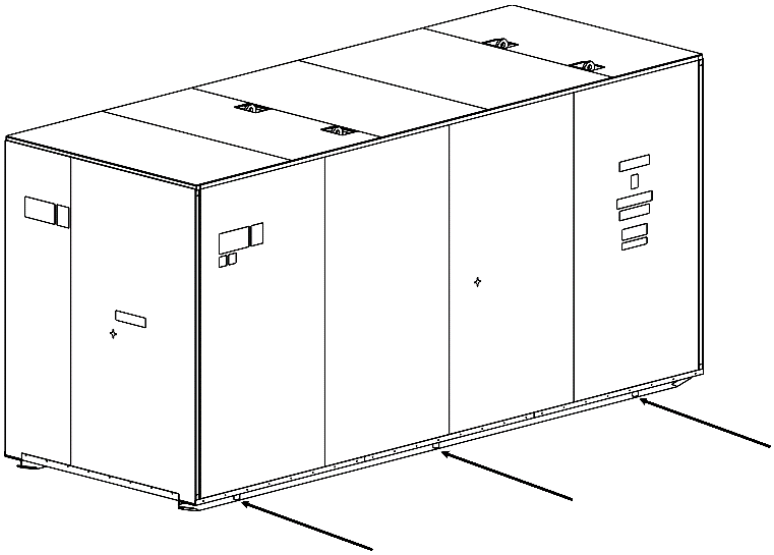

Elements for securing the VFD AT27 DD, MV lines during transportation are located on both sides of the item

Unload the AT27 from the truck in reverse order.

4. Storage conditions of VFD AT27

VFD AT27, its components and spare parts and accessories must be stored in its factory packaging. Storage of the VFD AT27, its components and spare parts and accessories should be carried out indoors or under a shed, where temperature and humidity fluctuations do not differ significantly from those in the open air. Storage is allowed in any macroclimatic areas, including areas with tropical climate in any type of atmosphere.

Recommended storage conditions for the VFD:

- Ambient temperature for the VFD AT27 ED, DD lines is ranging from -40 °C to +50 °C, for AT27 MV line – from -50 °C to +50 °C;

- Temperature and humidity fluctuations should not differ significantly from those in the open air.

WARNING! Any deviation from the recommended ambient parameters during storage of the VFD AT27 can lead to a decrease in the service life of the equipment and its possible failure.

WARNING! Do not store the UPS in ambient temperatures lower than -25 °C. Store the UPS in the area that provides the proper environmental conditions.

Check storage and packaging conditions on a monthly basis throughout the storage period of the equipment. If the packaging is damaged, the affected areas must be repaired.

Remove the UPS from its packaging and charge the UPS battery once every two months. To do this, connect the UPS to 220 V mains and turn it on. The end of charging time is indicated by the charge indicator on the UPS.

The allowable storage time in packaging and preservation is 2 years.

5. General requirements to the place of installation

When selecting the place of installation for the VFD AT27, refer to the following conditions and recommendations:

- The place of installation must meet the fire safety requirements for electrical installations above 1 kV without oil-filled equipment;

- The ambient temperature at the place of installation must be within the permissible range from +1 °C to +40 °C (for ED, DD lines) and from -10 °C to +60 °C (for MV line);

- The minimum distance from the roof of the VFD AT27 cabinets to the ceiling is 1000 mm;

- The place of installation of the VFD must comply with the dimensions given in the registration certificate of the VFD, as well as in App. 2. In addition, when installing the AT27 cabinets in one row, the width of the aisle from the door or removable walls must be at least 1 m; when the door of the cabinet is open at 90°, it is allowed to narrow the aisle to 0.6 m. When cabinets are arranged in two rows, the width of the service aisle between the cabinets must be at least 1.2 m; when the doors of two cabinets are open at 90°, located one opposite the other, a passage width of at least 0.6 m must remain between the doors.

- The VFD AT27 ED line consists of single-sided service cabinets. Access to the rear and side walls for maintenance and repair is not required.

- The VFD AT27 DD, MV lines are double-sided maintenance items and require access to the rear and side walls for maintenance and repair. Aisles must be provided to allow repair and maintenance as required to the drive mounting location specified above;

- When installing the VFD AT27 DD, MV lines outdoors, the foundation level at the place of the VFD installation must not be below the level of the adjacent landscape;

- Perform drainage system for protection against rain and ground water around the place of installation of AT27 DD, MV lines;

- Permissible level difference of the foundation is not more than 5 mm on all length of the VFD AT27. Additional requirements to the foundation are specified in p.10.2.

The room must provide heat extraction from the VFD, and the temperature in the room must not exceed 50 °C for the VFD AT27 ED, DD lines, and 60 °C for the VFD AT27 MV line. The power emitted by the VFD during operation is determined by its efficiency value and power rating.

Pay your attention that the AT27 ED line cabinets are installed close together, and can be installed with the rear walls of all cabinets and the side walls of the outermost cabinets close to the walls of the room, providing a reduction in the total space occupied. However, it is recommended to leave a space of at least 0.5 m between the rear wall of the VFD and the wall to ensure better air circulation through the cooling system of the VFD.

6. Removing and reassembling the package

WARNING! Do not remove the packaging from the item outdoors if there is a possibility of mechanical damage to the product when moving it.

When inspecting the product's packaging at the time of acceptance, pay attention to the condition of the shock sensors. Red color of the sensor (originally white) indicates that the cargo received a dangerous impact. The condition of the sensors should be recorded in the act of acceptance. If a dangerous shock is detected by the sensor, you must:

- Notify in writing the transport company that carried out the logistics of the equipment;

- Notify in writing, within no more than three days, the nearest service center of TrioL Corporation to assess the condition of the equipment and make a decision on whether to put the VFD into operation.

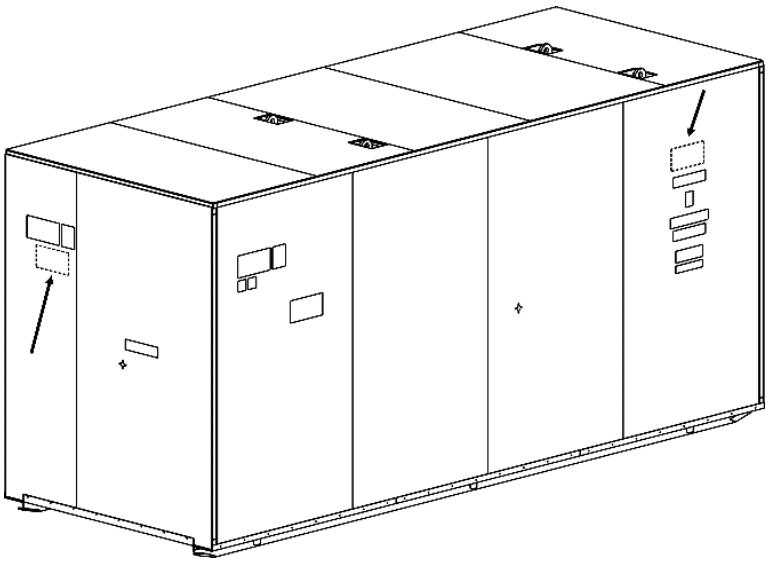

Location of the shock sensors on the item package

6.1 Removal of the package from the VFD AT27 ED line

It is necessary to remove the packaging just before installing the item at the place of operation. Prolonged storage of the item without packaging is not allowed. The requirements for storage of the item without packaging are specified in clause 7.1.

Unpacking should be performed in a dry room at ambient temperature from 1 °C to 40 °C. Before removing the packaging, the equipment should be placed on a flat surface.

To disassemble and remove the packaging, you need:

- At least two people;

- Screwdriver or turnscrew with a PH2 bit.

Dismantle the package in the following order:

- Remove the protective cover from the roof of the package;

- Unscrew the self-tapping screws and remove the top panel.

Use crane equipment to dismantle the top panel.

In order to perform all of the above steps, there are ledges in the shield frame design as shown below.

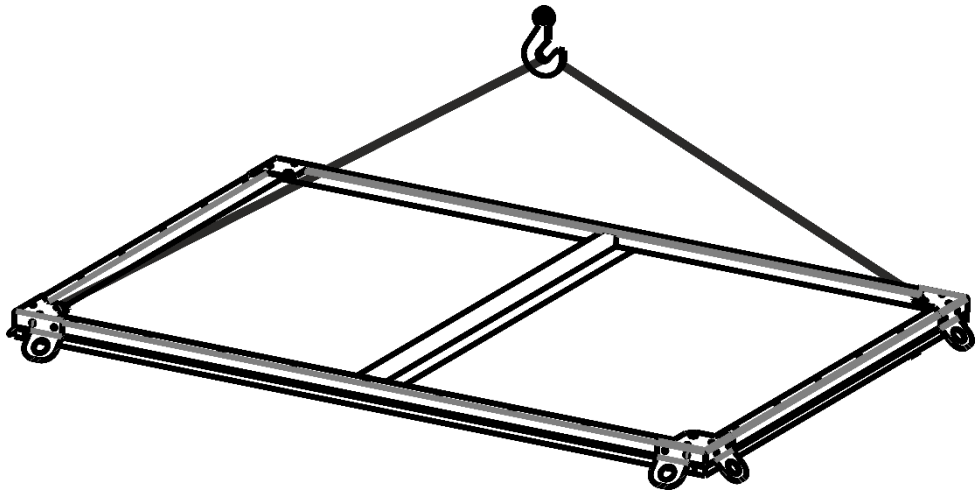

Slinging the top panel of the package

- Remove screws and side shields;

- Unscrew the brackets that hold the item to the bottom of the package.

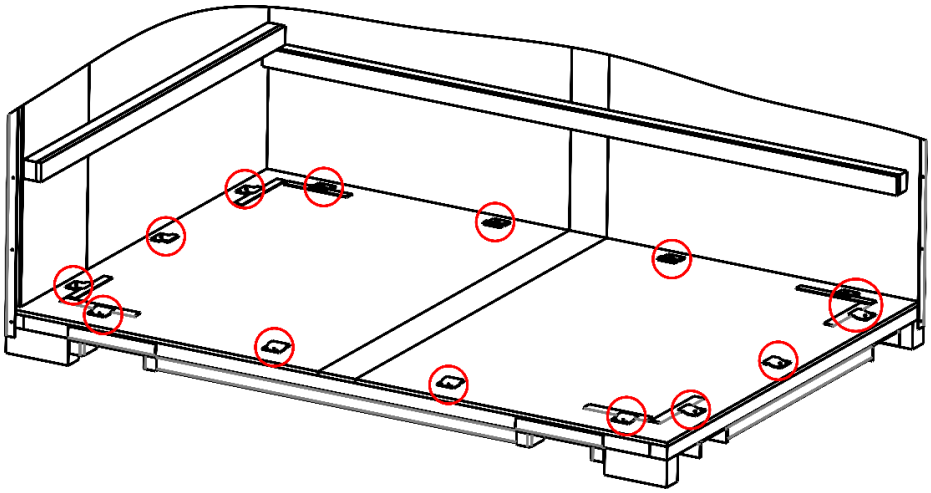

- The VFD AT27 is delivered in vacuum packaging. Before removing the packaging, check the integrity of the equipment, absence of mechanical damage, traces of moisture and other external impact. In the case of mechanical damage, traces of moisture and other external impact, draw up and sign the complaint act with a representative of the supplier. Reassemble the equipment packaging in the reverse order:

- Fasten the equipment to the bottom of the packaging with screws and staples;

- Install and screw down the side shields and brackets for rigidity;

- Mount and screw on the top panel.

The packaging must be able to withstand three cycles of assembly, transportation and disassembly. Unloading of the packed removable parts and components of the VFD is carried out by hoists specified in the project or manually. In general, in accordance with the requirements of hygiene, moving loads by one person weighing more than 50 kg is prohibited.

6.2 Removal of package from VFD AT27 DD, MV line

It is necessary to remove the packaging immediately before installing the item at the place of operation. Transportation and long-term storage of the item without packaging is not allowed.

Removal of the packaging should be carried out under favourable weather conditions. Before removing the packaging, the equipment must be placed on a flat surface. Removal of the packaging in the rain is not allowed.

To disassemble and remove the packaging, you need:

- At least two people;

- Screwdriver or turnscrew with a PH2 bit.

Dismantle the package in the following order:

- Remove the protective cover from the roof of the package;

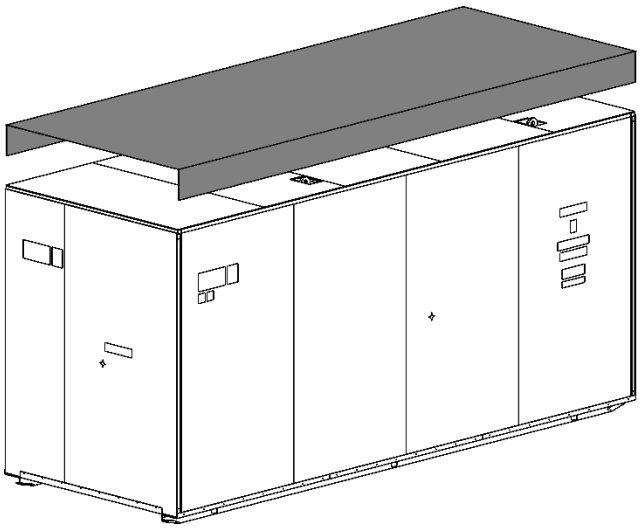

- Unscrew the self-tapping screws and remove the top panel. To dismantle the top panel, use crane equipment. Slinging must be performed with textile straps by covering the package.

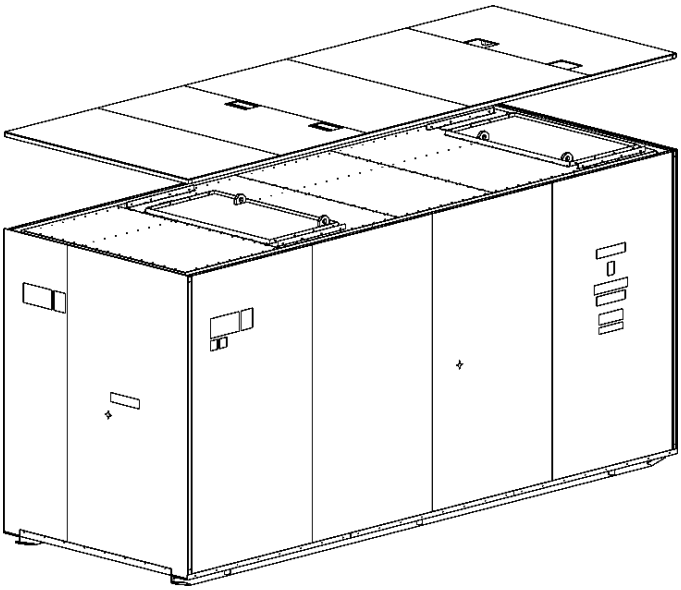

Remove the screws and side shields;

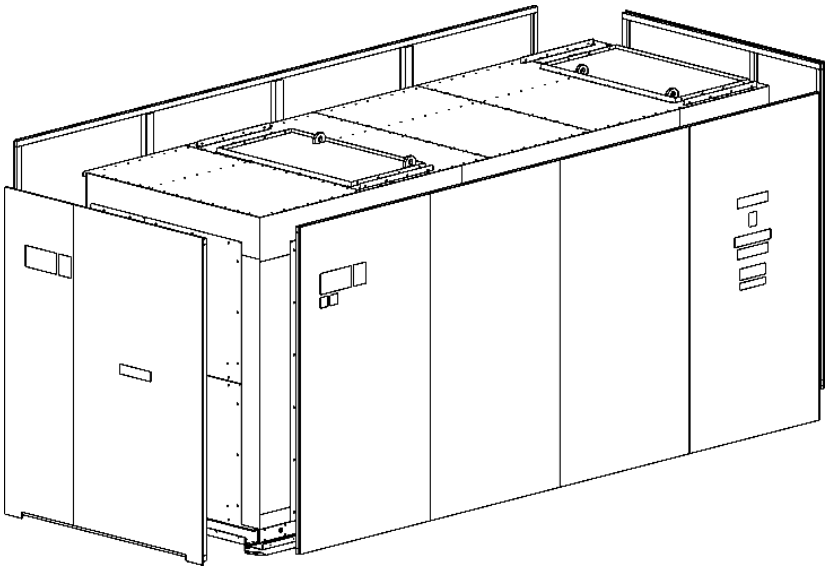

- Unscrew the brackets that hold the item to the bottom of the package.

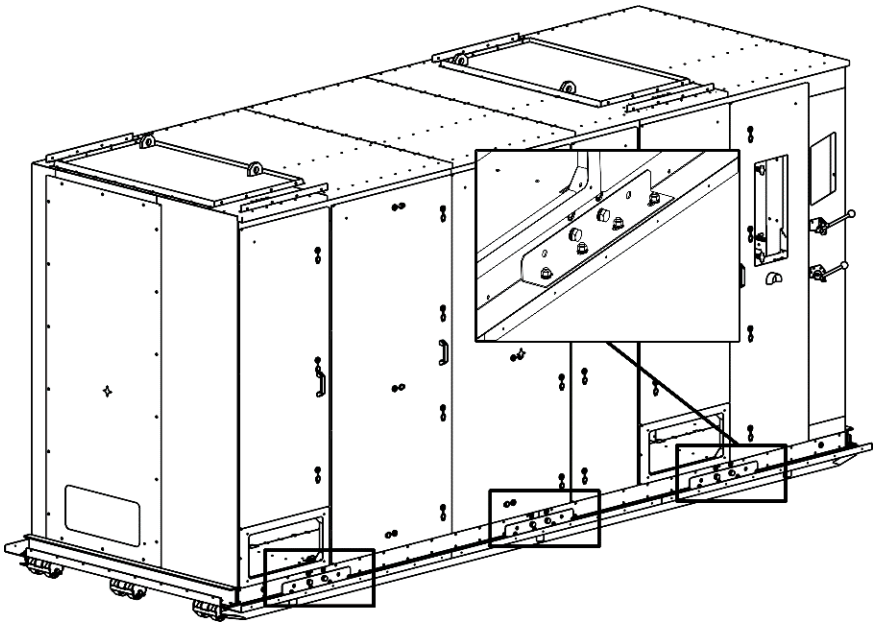

- The VFD AT27 equipment is delivered in a polyethylene package. Before removing this packaging, once again check the integrity of the product, absence of mechanical damage, traces of moisture and other external impact.

Assembly of the package is carried out in reverse order:

- Fasten the equipment to the bottom of the packaging with screws and staples;

- Install and screw down the side shields and brackets for rigidity;

- Mount and screw on the top panel.

Unloading of the packed removable parts and components of the VFD is carried out by hoists specified in the project or manually. In general, in accordance with the requirements of hygiene, moving loads by one person weighing more than 50 kg is prohibited.

7. Preservation and re-conservation

7.1 Preservation

In case it is necessary to put the VFD out of operation and to conserve it for a long time, the item must be preserved.

Preservation of the VFD is performed by sealing the apertures and openings in the VFD casing. The preservation period should not exceed 6 months, in case of longer storage, it is necessary to re-preserve the VFD.

Sealing is carried out in the following sequence:

- De-energize the VFD. Take measures to prevent the power supply and auxiliary voltage from being switched on;

- Remove the roof fans of the cooling system of the VFD.

- Put not less than 2 kg of silica gel to the Transformer compartment, Power cells compartment, Switching compartment or Cell cabinet and Transformer cabinet;

- Seal the drainage holes in the air preparation compartment of the VFD AT27 DD line;

- Install and seal the transport plugs on the mounting points of the cooling system fans and on the air intake openings for the VFD AT27 ED, DD lines.

Inspect the VFD and replace the silica gel at least every 6 months.

7.2 Re-conservation

Before putting the item into operation after storage, the equipment must be reactivated. It is recommended to carry out the re-conservation after installing the item at the place of operation.

The VFD AT27 ED, DD, MV lines have transport plugs that allow to prevent the ingress of foreign elements inside the item during transportation and create hermetic circuit for possibility of preservation of the item.

Creation of acceptable microclimate in conditionally hermetic shell is also achieved by means of silica gel located directly inside the equipment.

To deactivate the equipment after unpacking, it is necessary to:

- Remove transportation plugs by first unscrewing the usual fasteners (transport plugs on the roof must be removed immediately before installing the fan);

- Remove the silica gel bags from the internal equipment compartments.

Transport plugs are not to be disposed of and are used to re-conserve the equipment for the long downtime.

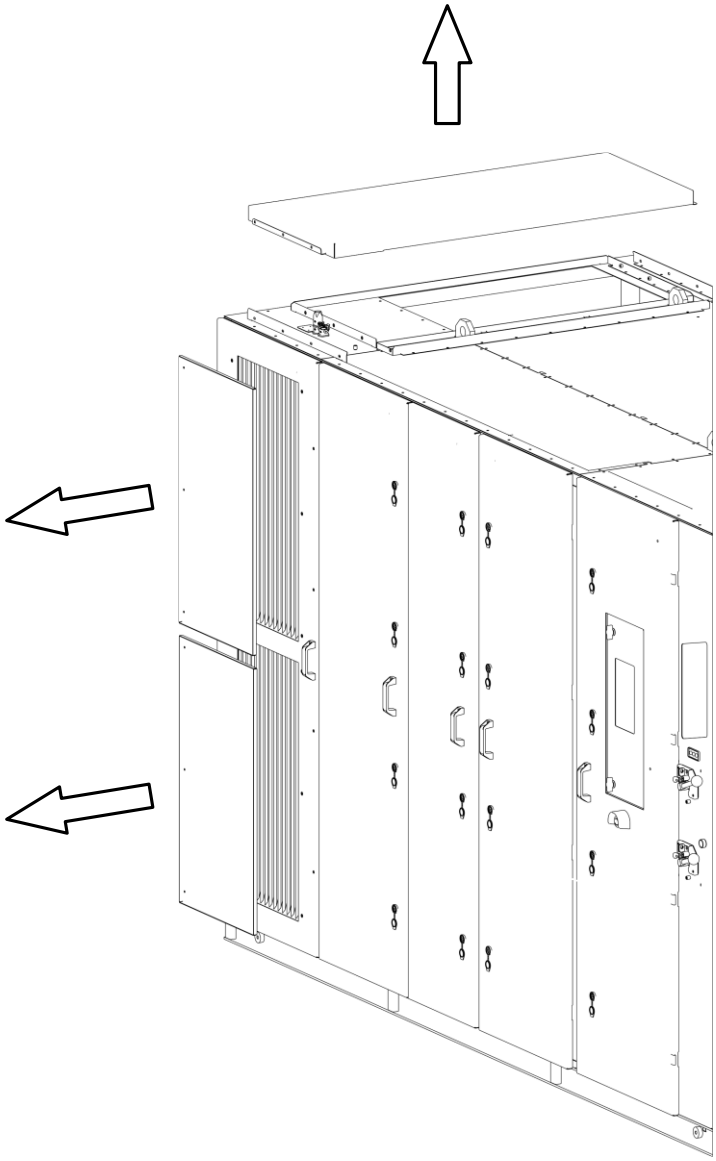

Removing transport plugs on the VFD AT27 DD line

8. Packaging storage and disposal

8.1 Packaging storage.

Storage conditions for the components of the package:

- Ambient temperature -40 °C ... +60 °C.

- Relative humidity 85% at 25 °C.

The package shields must be stored vertically. Water ingress, as well as mechanical influences on the package elements must be excluded.

8.2 Disposal of packaging

After the packaging has been used, it must be handed over to a specialised organisation for the disposal of industrial waste.

9. Acceptance

The VFD AT27 ED, DD, MV lines are transported in partially disassembled condition.

Set of delivery with indication of dimensions and weights of packages is specified in the packing list, located on the front side of the package.

The delivery set of the VFD AT27 includes a set of keys to open the doors, as well as a set of all the necessary fasteners for installation and connection of the drive.

Keys and documentation on the package are marked with inscriptions "Keys" and "Documentation".

Spare parts and accessories for the item are transported in separate packages. The set of spare parts and accessories is supplied in accordance with the supply contract.

Operational documentation and USB flash drive are placed in the package together with the UPS.

The fasteners for each mounting location are screwed into the corresponding mounting hole during transportation.

Upon receipt of the item, it must be accepted according to the completeness of the package contents as indicated on the packaging list. Check the packaging of all items for completeness and lack of damage.

In case of any remarks to the package integrity and completeness of the item, record them in the certificate of acceptance.

On the front side of the package and on the product itself in the lower right part, disposable shock sensors Shock Watch are installed at the factory. Red sensor (originally white) indicates that the shipment received a hazardous shock. The condition of the sensors should be recorded in the acceptance report.

After unpacking the item, check it with the following criteria:

- Check the VFD marking on the packaging list with your order. The VFD marking can be found on the rating plate located on the front of the cabinet.

- Inspect the VFD for scratches, moisture and other damage incurred during transportation. Check the condition of the shock sensors.

- Check that the fasteners have not fallen out of their places and there is no free movement of the external parts of the VFD case.

During the acceptance process, each compartment should be opened and inspected according to the following criteria:

- Presence of fasteners falling out of their places;

- Free movement of busbars and cable lugs;
- The damage of conductor insulation in visible places;
- Quality of wire fixation, absence of fallen out wires from the trays;
- Absence of visible transformer damage;
- No traces of exposure to moisture;
- Functioning of disconnector and earthing switch;
- Presence of dust and other foreign objects.

If the above factors are detected, they must be mentioned in the acceptance report and the Triol Service Center must be informed in writing about the detected discrepancies, and these discrepancies must be noted in the service book of the received item.

10. Installation

10.1 Installation at the place of operation

To install the VFD AT27, it must be transported across the plant to the place intended for operation.

It is necessary to install the VFD equipment only on the place intended for this purpose, where its falling, overturning and sliding is excluded.

When selecting the place for installation of the equipment, its weight should be taken into account in order to avoid destruction of ceilings and foundations.

10.1.1 Slinging of the VFD AT27 ED line.

For strapping the VFD AT27 ED line, it is necessary to install strapping eyelets pos.2, included in the kit, fix them with bolts M16 of strength class at least 8.8, with spring and flat washers for mounting points pos.1, as shown below.

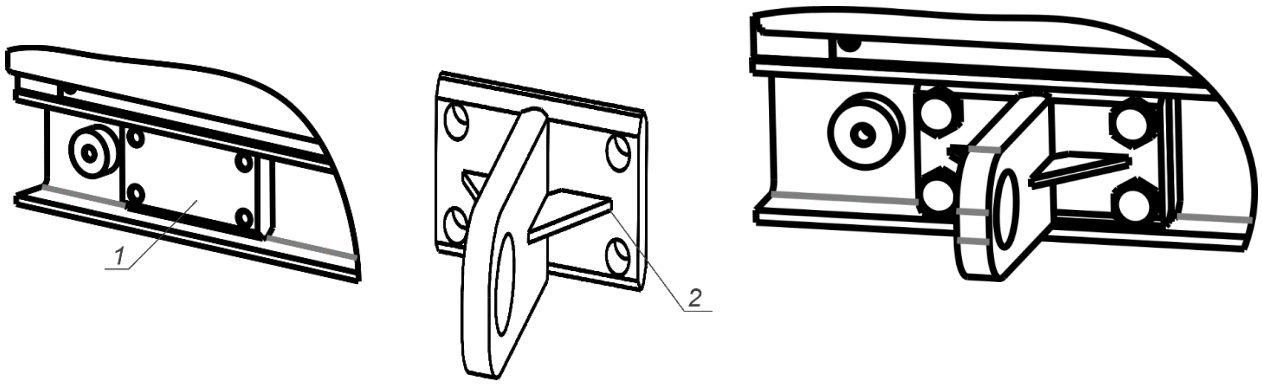

The choice of slings for lifting loads depends on the weight of the load indicated on the packaging of the equipment, taking into account the number of branches and their angle of inclination. The slings should be selected so that the angle between the sling branches does not exceed 90º.

WARNING! When strapping transformer cabinets, all four strapping points on top of the cabinets must be used.

WARNING! Do not lift or move the load when people are near the equipment.

The transformer cabinet is moved by means of strapping eyelets and rigging brackets as shown in section 3.2.1.

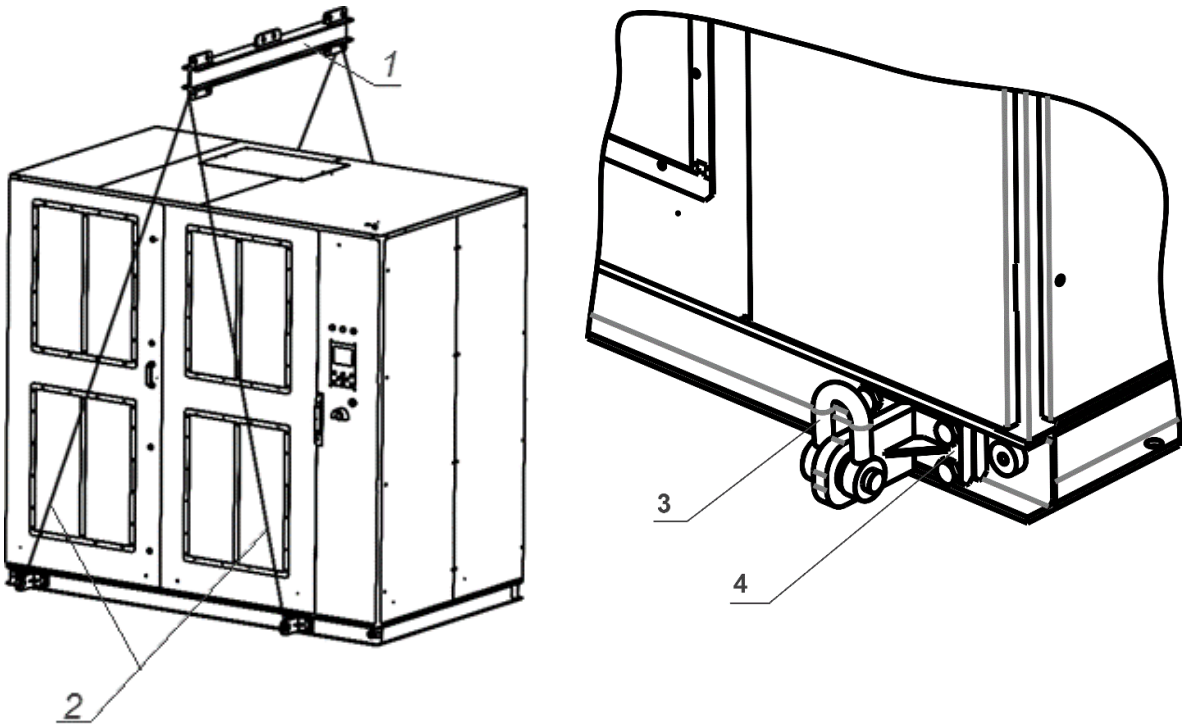

1 - beam traverse; 2 - slings; 3 - rigging bracket;
4- strapping eyelets.

Switching cabinets CB27, as well as optional cabinets are transported by the eyebolts installed in the roof of each cabinet.

It is allowed to move the VFD AT27 ED line cabinets to the place of operation on rollers as shown below.

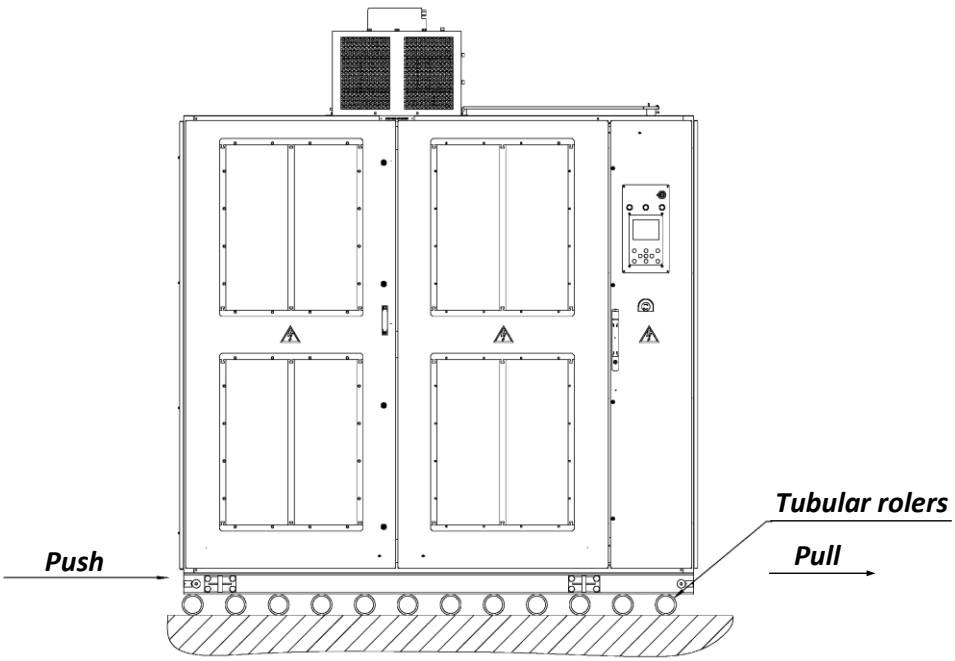

10.1.2 Slinging of VFD AT27 DD, MV lines.

Slinging of VFD AT27 DD, MV lines must be carried out by the eyelets, located on the roof of the cabinet.

Slinging must be performed according to the requirements of Section 3.3.1 of this manual.

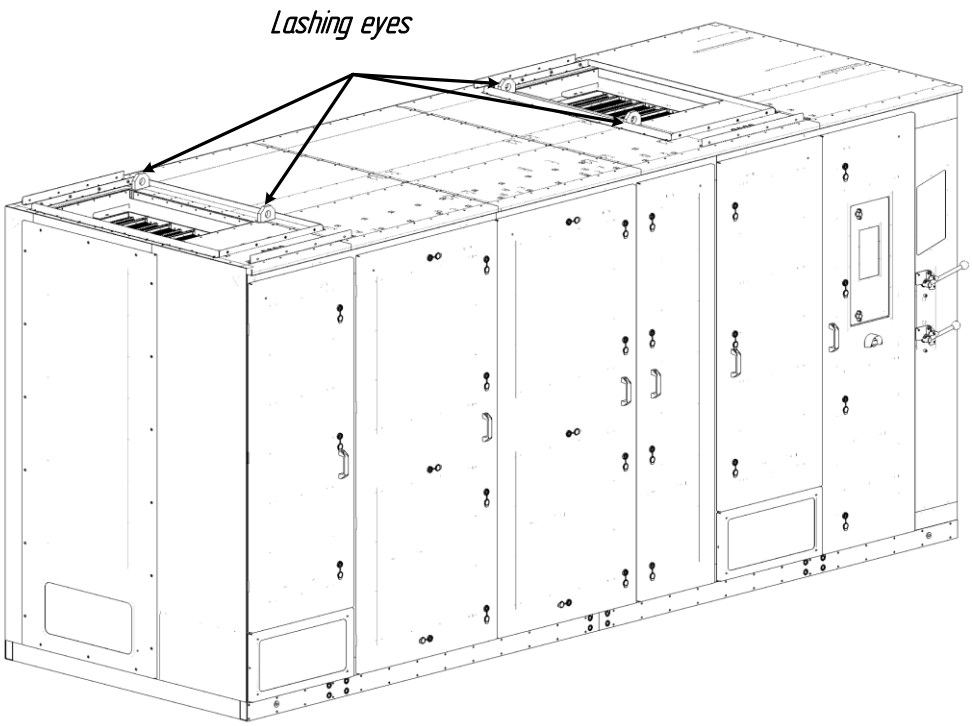

10.2 Substrate Requirements

Installation of AT27 can be carried out on:

- Concrete (reinforced concrete);
- Metal construction base (foundation);
- Framework made of metal structures or on the building foundation made with the use of embedded elements.

DO NOT install the VFD on a base made of flammable material! All installation methods must ensure mechanical contact of the surface of the building base with the bearing surfaces of the long sides of the AT27 cabinets over the entire area of these surfaces.

The short sides of the base perimeter of any or all AT27 cabinets may not have mechanical contact with the structural base. The building foundation of the cabinets must ensure that the cabinets are installed without

warping and that there is no inadmissible vibration.
Below is an example of installation of AT27 cabinets on the foundation with a cable duct and embedded metal structures made of steel corner 70x70x5.

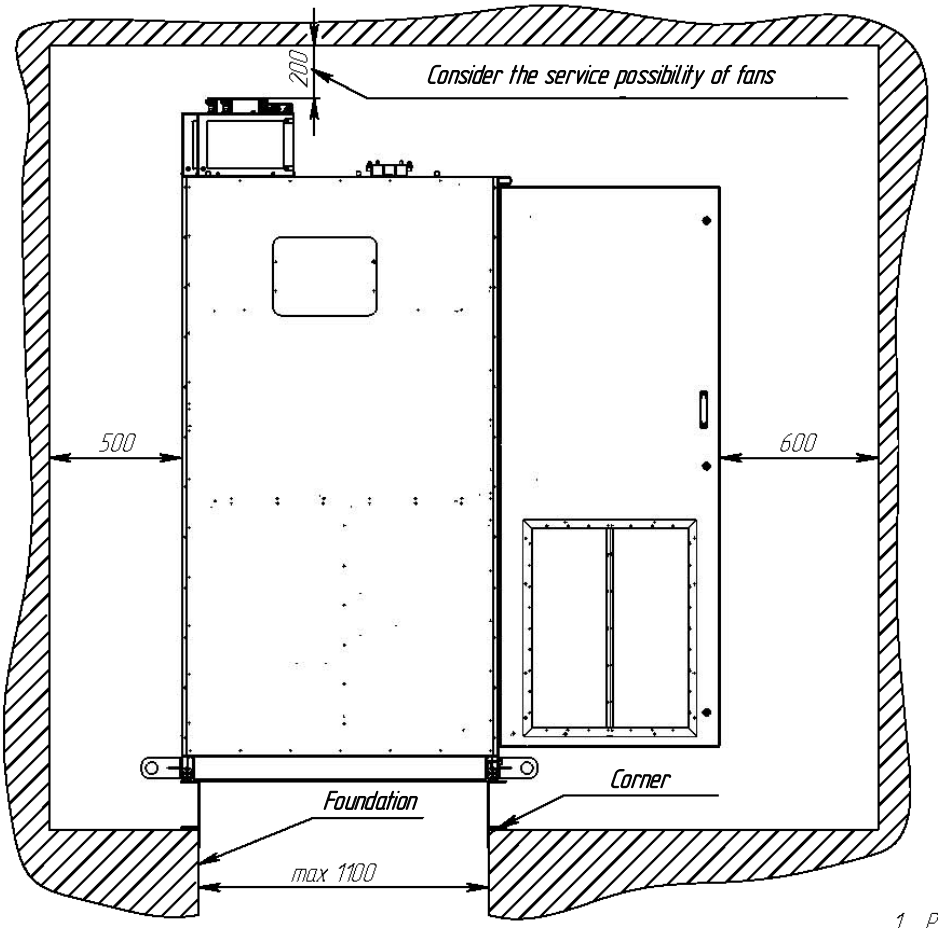

Installation of the VFD AT27 ED line on the foundation (version with an air gap on the rear side of the VFD AT27)

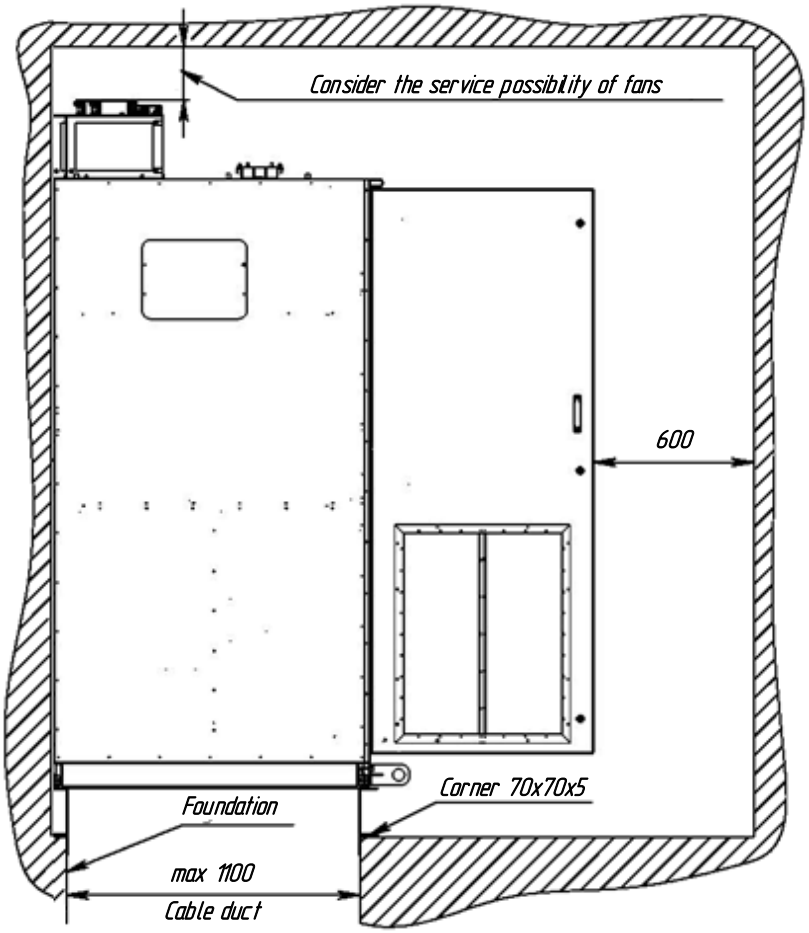

Installation of the VFD AT27 ED line on the foundation (option of installation against the wall of the room)

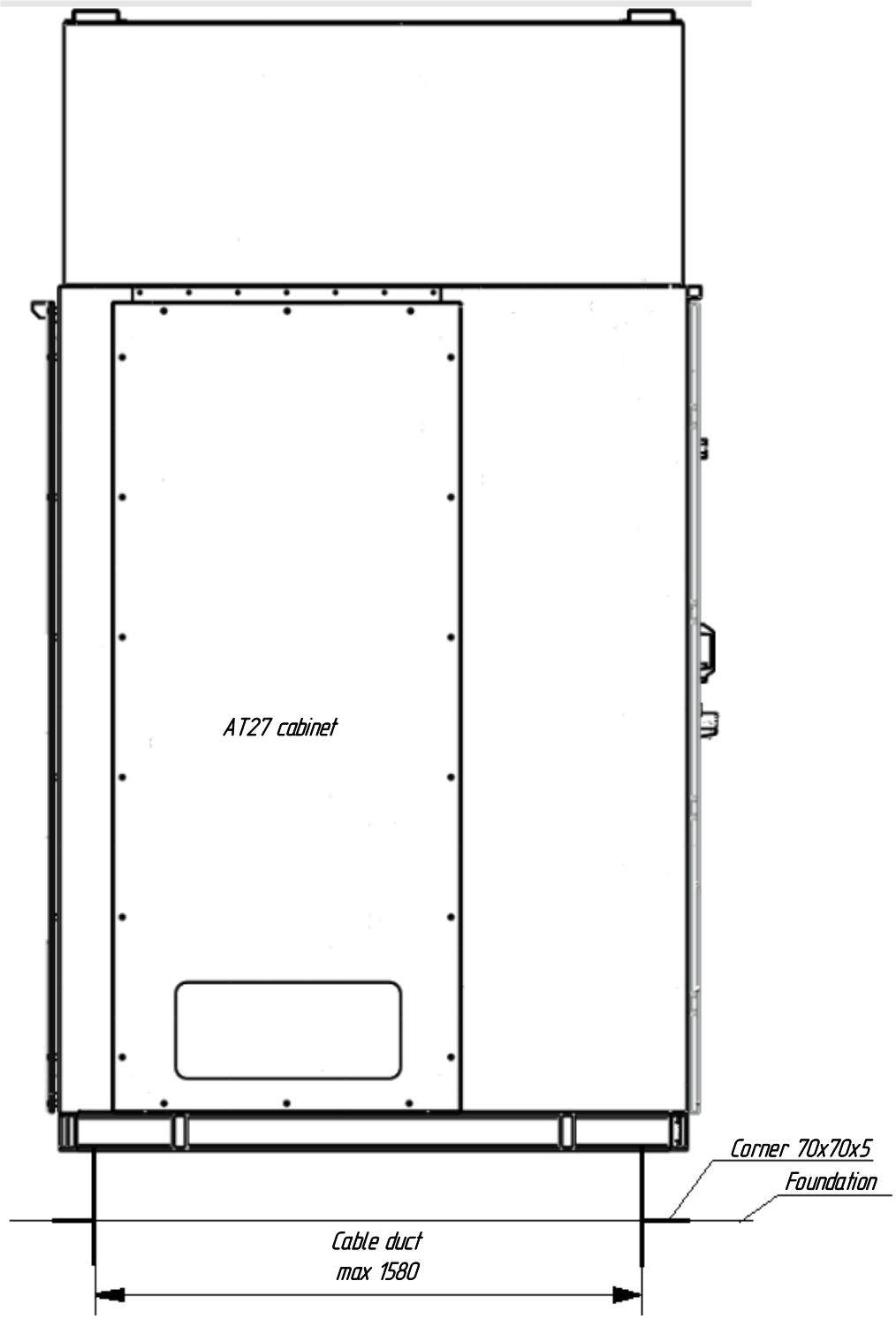

Installation of the VFD AT27 DD, MV lines on the foundation

After installation, weld the VFD AT27 cabinets to the base made of steel corners.

After installing the cabinets, open all doors and make sure they are fully open and closed. If the doors do not fully open or close, adjust the position of the cabinet.

10.3. Installation and mounting of fans

10.3.1. Installation and mounting of the VFD AT27 ED line

To mount the fan (transported separately in an individual packing place), it is necessary to:

- Remove the fan unit with diffuser assembly from the package;
- Dismantle the transport plates from the exhaust holes in the cabinet roof;
- Install the fan unit on the roof of the cabinet as shown in the figure below, using a telpher or other lifting device. Orient the fan assembly so that the cable connectors are oriented toward the cable route out of the box. Fasten with a screwdriver using the M6 screws with spring washer and flat washer included in the delivery.

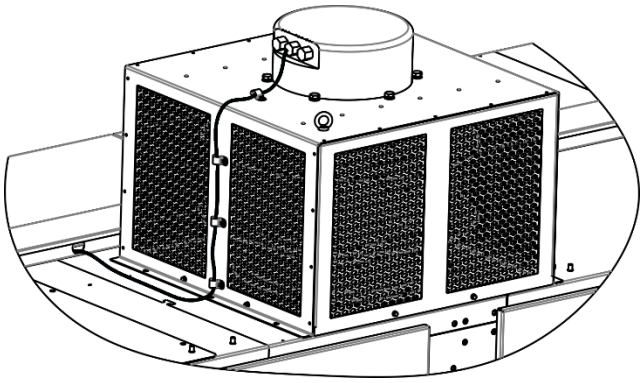

Installing the fan unit, cable routing

- Unscrew the cover of the fan terminal box. The screws can be removed counterclockwise using a screwdriver with a TX20 bit or a T4 bit. Remove the ends of the wires for connecting the fan from the cable routing. Pass the cables through the cable glands in accordance with the purpose of the connection and connect them to the fan contacts in accordance with the diagram below.

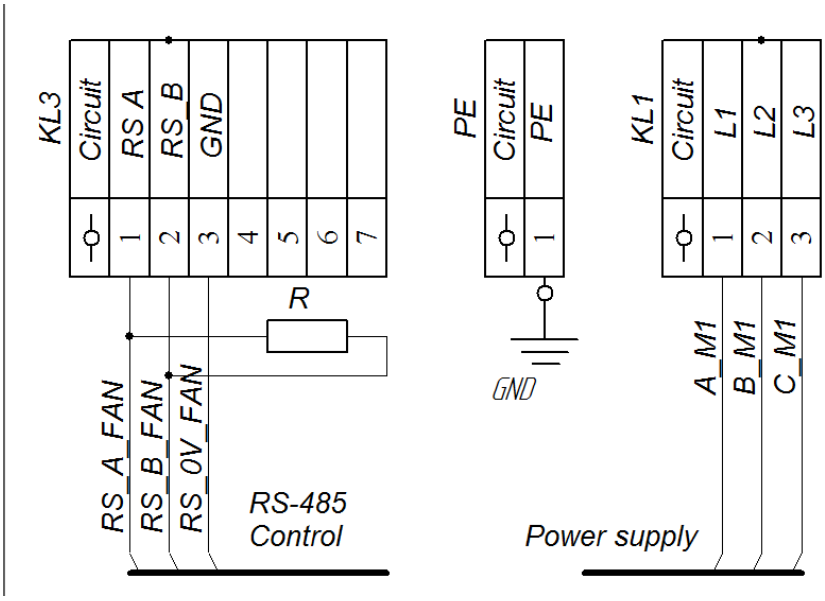

R3G 500-AQ33-01 Fan connection diagram

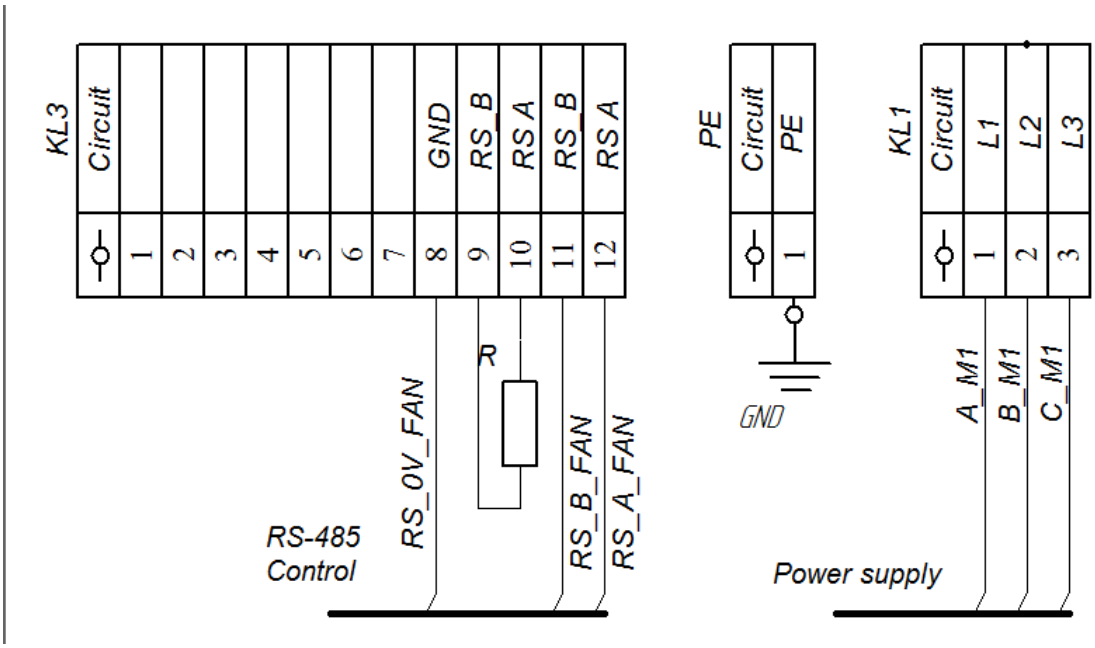

R3G280-AU11-C1 Fan connection diagram

If the VFD is supplied with the "redundant fan" option, install it in the following sequence:

- Remove the fan unit with a diffuser assembly from the package;
- Remove the gravity valves from the package;
- Assemble the gravity valve (pos. 2) with the fan (pos. 1) using the M6 fasteners, which are included in the delivery set, as shown in the figure below;
- Install the prefabricated structure on the roof of the VFD as described above.

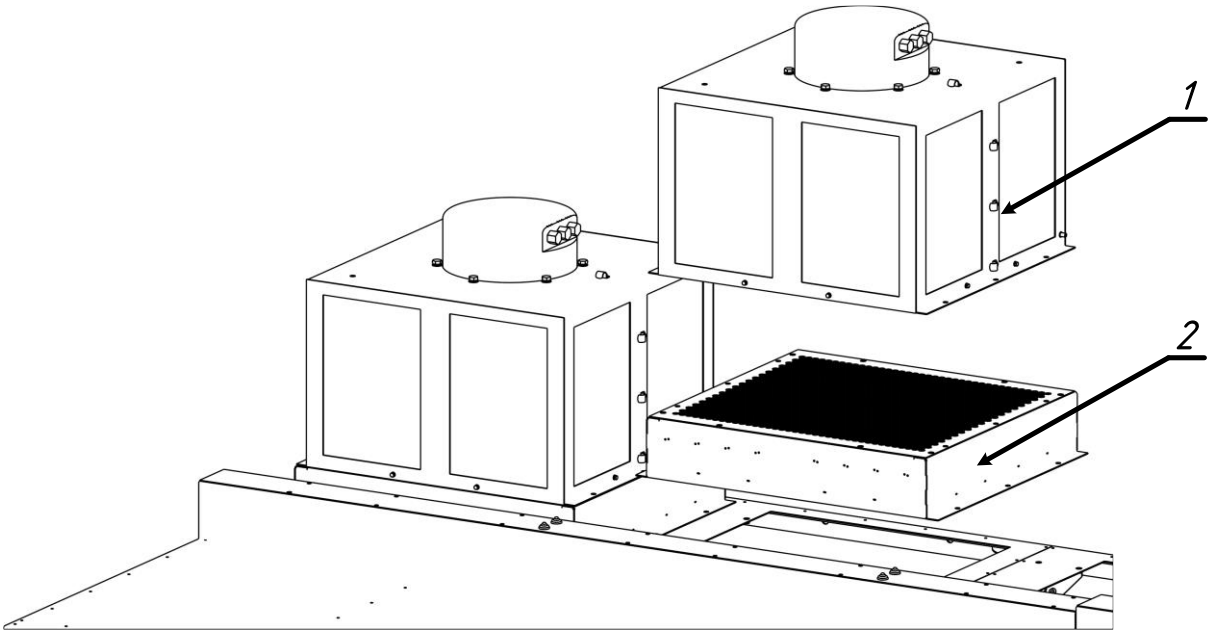

Installing a fan assembly with a gravity valve

10.3.2. Fans installation and mounting of VFD AT27 DD, MV lines

To mount the fan (transported separately in an individual packing place), it is necessary to:

- Remove the fan unit with diffuser assembly from the package;
- Dismantle the transport plates from the exhaust holes in the cabinet roof;
- Install the fan unit on the roof of the cabinet as shown in the figure below, using a telpher or other lifting device. Orient the fan assembly so that the cable connectors are oriented toward the cable route out of the box. Fasten with a screwdriver using the M6 screws with spring washer and flat washer included in the delivery.

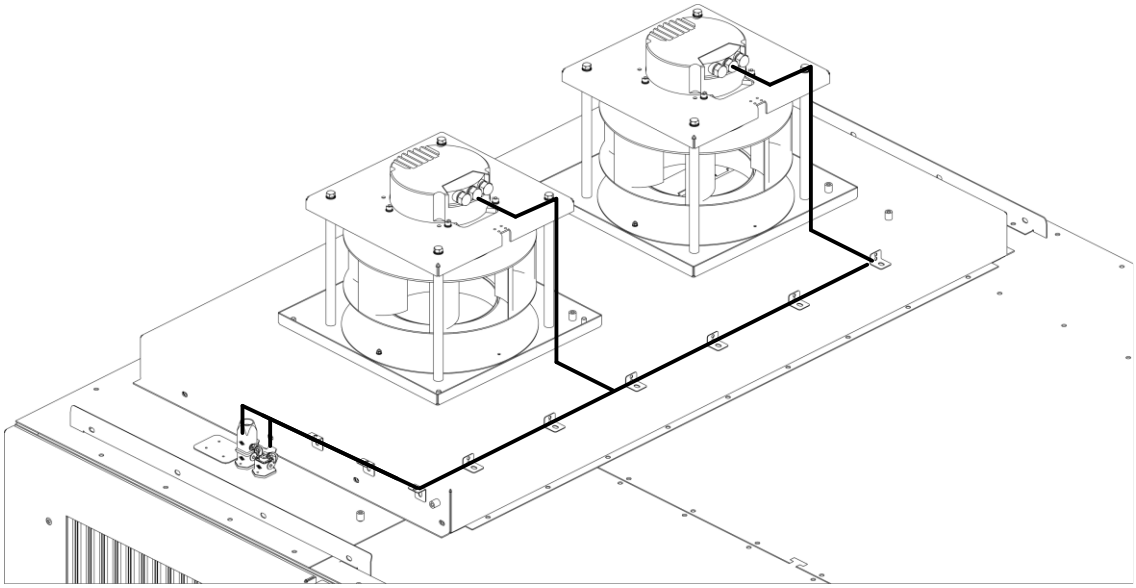

Installing the fan unit, cable routing

- Unscrew the cover of the fan terminal box. The screws can be removed counterclockwise using a screwdriver with a TX20 bit or a T4 bit. Remove the ends of the wires for connecting the fan from the cable routing. Pass the cables through the cable glands in accordance with the purpose of the connection and connect them to the fan contacts in accordance with the diagram below.

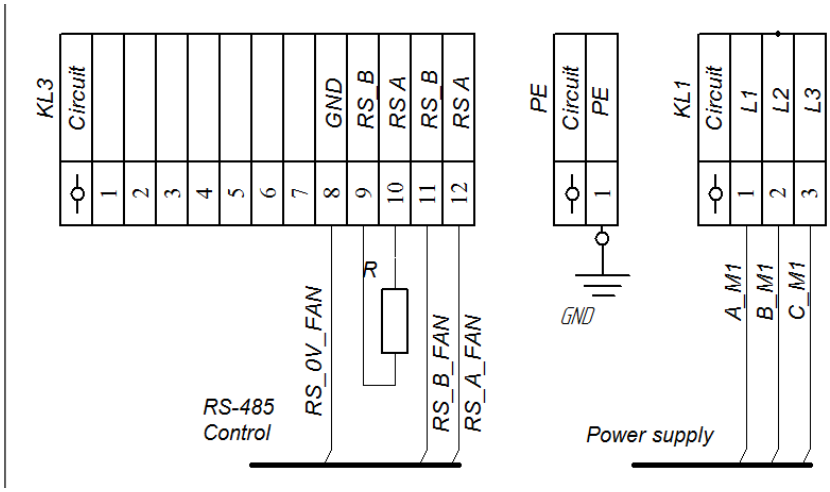

R3G280-AU11-C1 Fan connection diagram

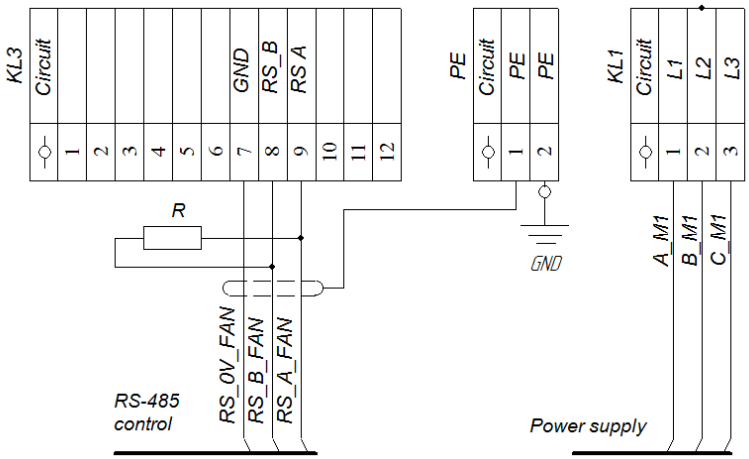

R3G450-PA31-03 Fan connection diagram

10.4. UPS installation and connection in AT27 ED line

The UPS is transported separately from the VFD AT27 and is installed immediately after the VFD AT27 ED line is installed on the site during installation work. The UPS is located at the bottom of the control system compartment as shown in the figure below.

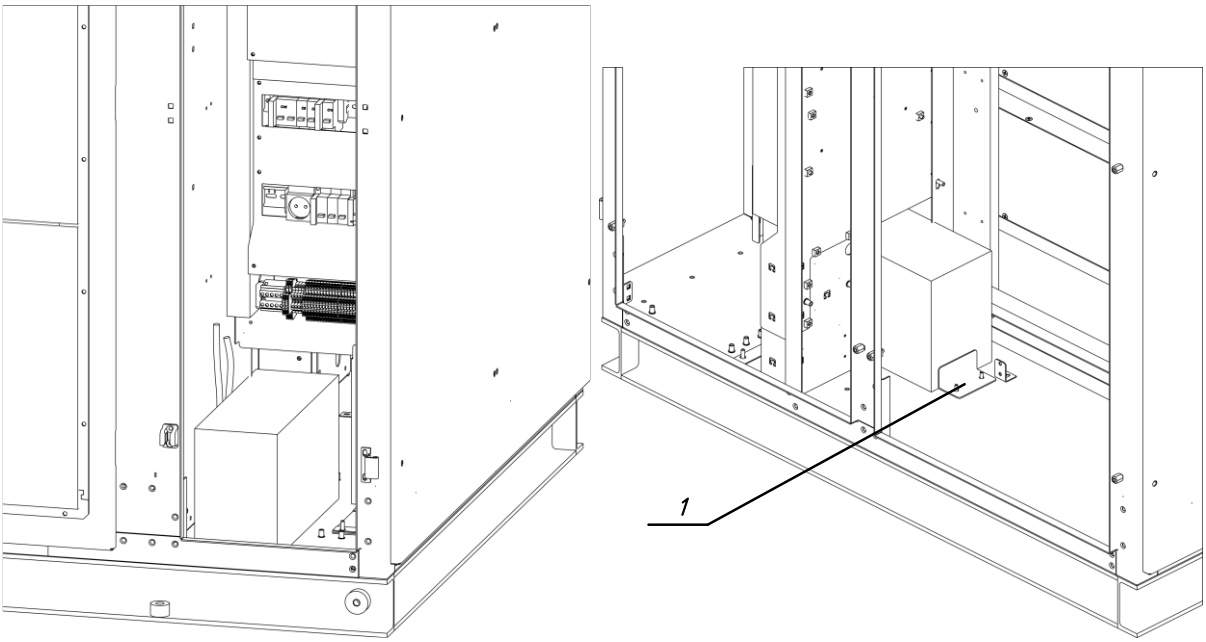

Installing an uninterruptible power supply

To install it, it is necessary to:

- Connect the XP3 plug in the control compartment to the sockets on the rear panel of the UPS;
- Install the UPS in the place intended for its installation in the control system compartment up to the stop bracket pos. 1;
- Connect the power cable from the UPS kit to the XS3 “UPS power” socket.

10.5 UPS installation and connection in AT27 DD, MV lines

The UPS is transported separately from the VFD AT27 DD, MV line and installed immediately after the VFD AT27 ED line is installed on the site during installation work. The UPS is located at the bottom of the control system compartment as shown in the figure below.

The procedure for installing the UPS in the control compartment is as follows:

- Open the control panel to access the switching compartment;
- Install the UPS pos. 1 in the control system compartment to the place intended for its installation;
- Connect the UPS pos. 1. Connections are located on the rear part of the UPS;
- Install the bracket pos. 3, fix it with the fasteners pos. 2.

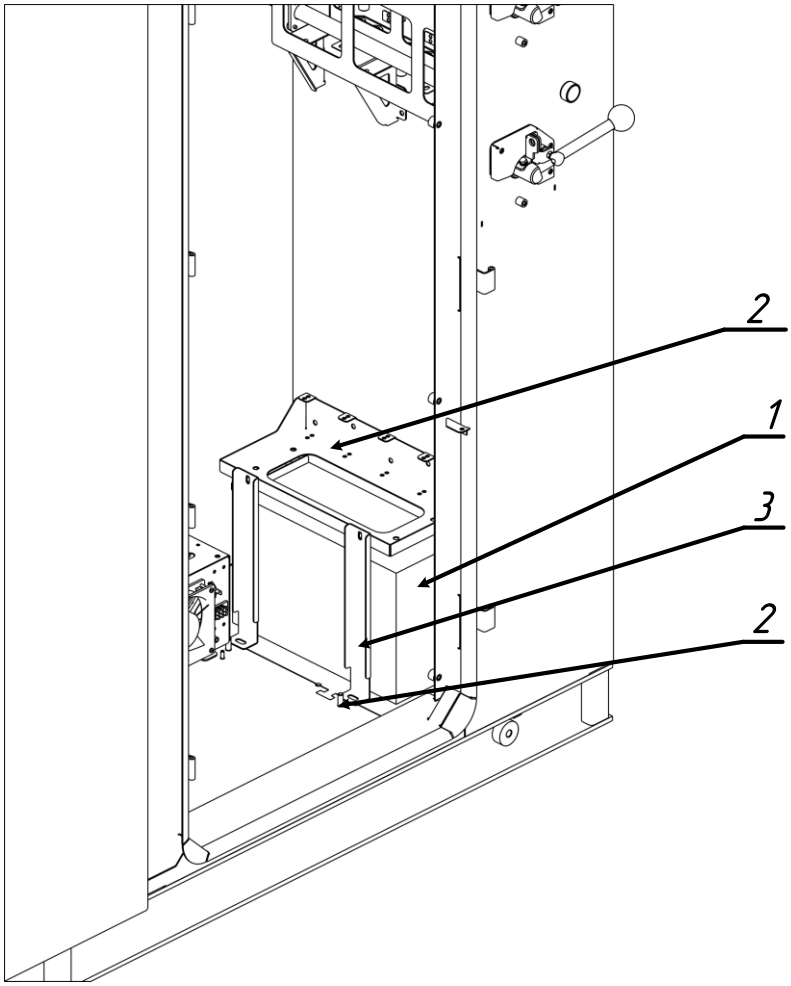

10.6. Mutual arrangement and mounting of the VFD AT27 cabinets

10.6.1. Cabinets arrangement of VFD AT27 ED line

With the complete delivery of the VFD, when the delivery includes high-voltage switching cabinets and CB27 output filter cabinets, their installation is carried out in a certain sequence:

- A monocabinet of the VFD is installed or the cabinets of the power cells and the transformer are installed separately. The transformer cabinet always should be installed to the left of the power cubicle.
- An output filter cabinet is installed to the left of the monocabinet or assembly of transformer cabinets and power cells.

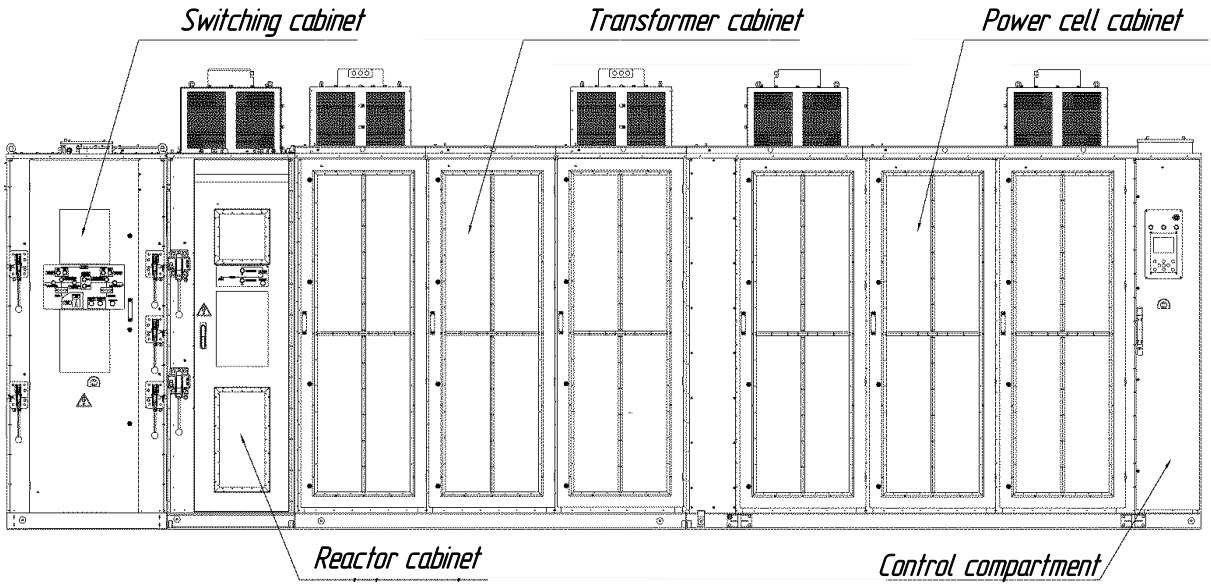

High-voltage switching cabinets are installed in the sequence suggested by the project for connecting high-voltage cables to the left of the output filter cabinet.

The figure shows an example of the arrangement of equipment as a part of the VFD AT27-2M5-6/6-ED000, the CB27-6/3M0/4P0-43 reactor cabinet and the switching cabinet with the "input, output, bypass" function CB27-10/630/110-43.

The cabinets are connected with bolts, through the braces installed on the power frames of the cabinets.

10.6.2. Cabinets arrangement of VFD AT27 DD, MV lines

The figure shows an example of the arrangement of equipment as a part of the VFD AT27-2M5-10/10-MV120 and a switching cabinet CB27-10/630/100-43. When placing high-voltage switching cabinets to the left of the VFD AT27, a minimum clearance of 1000 mm is provided for inter-cabinet connections. When placing high-voltage switching cabinets to the right of the VFD AT27, there is no need to provide clearance, the cabinets can be installed close to each other, as shown in the figure below.

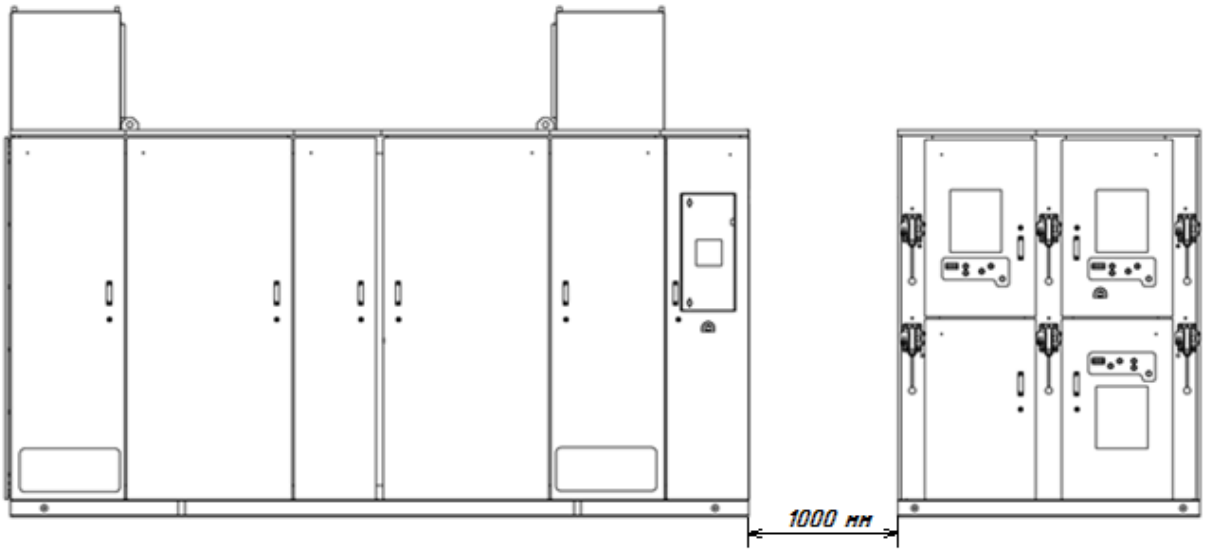

The mutual arrangement of VFD AT27 DD, MV cabinets in the delivery set (switching cabinets on the right).

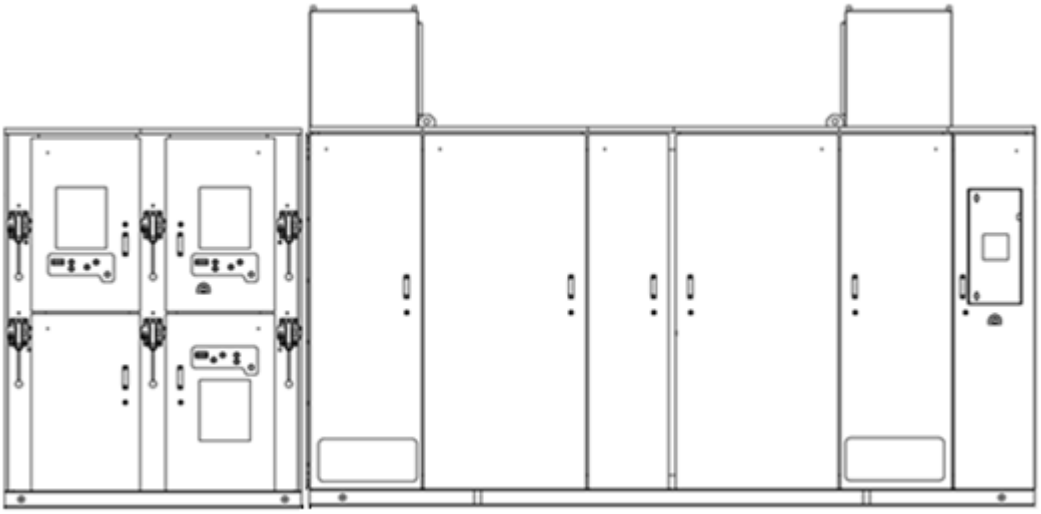

The mutual arrangement of VFD AT27, MV cabinets in the delivery set (switching cabinets on the left).

11. Electrical mounting

11.1. General information about electrical mounting

WARNING! The installation of the VFD must be carried out by qualified specialists who have an appropriate permit to work in electrical installations above 1000V.

WARNING! The VFD is connected to hazardous voltages and operates machines with rotating mechanical parts that are sources of danger. For this reason, ONLY qualified personnel are allowed to carry out electrical installation work on the VFD AT27.

WARNING! Before electrical installation and connection of the VFD, make sure that the circuits to be connected to are de-energized and reliably grounded.

WARNING! Life-threatening voltages can still be present on live parts after the VFD has been disconnected from its power supply. To prevent electric shock, it is necessary to start work no earlier than 15 minutes after the power is removed from the VFD.

WARNING! Ground the VFD output to the motor to ensure that there is no voltage at the VFD output terminals.

WARNING! Do not operate the VFD with any parts unsecured or removed, as there is a risk of electric shock and/or damage to the equipment.

ATTENTION! Tighten all bolted connections. Poor electrical connections can result in serious injury and equipment damage due to overheating of the electrical connection.

11.2. Grounding the VFD AT27

The grounding of the VFD AT27 equipment must be carried out taking into account the requirements for grounding of electrical installations with an operating voltage above 1000V. In general, the smallest cross-sectional square of protective conductors is given in table 1.

Table 1 – The smallest cross-section of protective conductors

Phase conductor cross-section, mm^2	The smallest cross-section of protective conductors, mm^2
S≤16	S
16<S≤35	16
S>35	S/2

The cross-sectional squares are given when the protective conductors are made of the same material as the phase conductors. Cross-sections of protective conductors made of other materials must be equivalent in conductivity to those given.

Grounding of the VFD AT27 equipment is carried out on the workshop's grounding loop. The grounding conductor must be connected to the grounding block located on the power frame of the cabinet. Before connecting, lubricate the end (unpainted) surface of the grounding blocks with conductive grease. The grounding block is marked with a grounding symbol.

Grounding symbol

Each cabinet must be grounded with separate conductors at the locations marked with the grounding symbol.

11.3. Electromagnetic compatibility

The VFD AT27 provides electromagnetic compatibility with the electric motor and power supply system in accordance with the 51524-2012 standard (EN 61800-3:2004/A1:2012).

The level of voltage and current fluctuations in the network caused by the VFD complies with the current CIS standards and the IEEE Std 519-2014.

Recommendations for electromagnetic compatibility and interference mitigation:

- Make sure that all VFD AT27 cabinets and other equipment are properly grounded.
- Each VFD cabinet must have an independent grounding to the plant grounding bus. Serial grounding of cabinets is prohibited. It is recommended that each cabinet is grounded at one point to prevent ground currents from circulating through the cabinet as shown in the figure below.

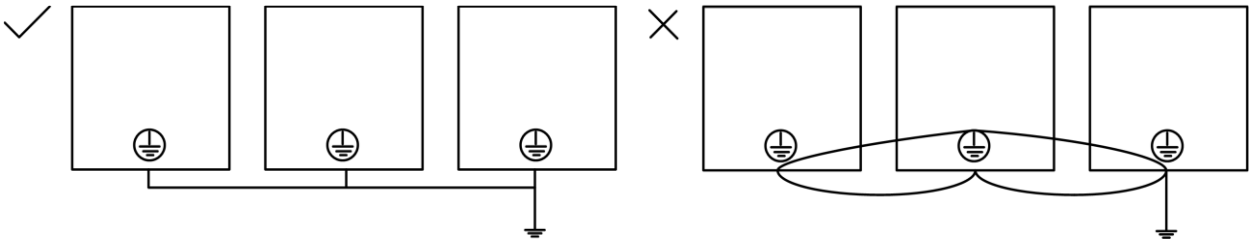

Grounding the VFD AT27 cabinets

- If the VFD and the electric motor are connected to the same grounding loop, the shield must be grounded at two places, that is, on the VFD side and on the motor side. The grounding resistance must be as low as possible. If the VFD equipment and the electric motor are connected to different grounding loops, the screen is grounded on one side of the route.
- The grounding of the screens of power cables entering and leaving the VFD AT27 cabinets is carried out on the grounding clamps inside the VFD AT27 cabinets or CB27 switching cabinets.
- The grounding of screens the control cables entering the control system compartment is carried out on the grounding block inside the control system compartment.

- It is recommended to split analog and digital cables into separate trays.

- Do not use one cable for 110/220 V signals and 24 V signals.
- Control and signal cables must be laid separately from power cables. If the control and power cables are laid in the same cable duct, then they must be laid in different trays or separated by a conductive grounded partition. It is recommended that the distance between the control signal cables be at least 200 mm.
- When crossing control and signal cables, then the crossing angle of the cables should be as close to 90° as possible.

11.4. Guidelines for selecting power cables

To connect the VFD AT27 equipment, it is recommended to use a three-phase screen cable with copper or aluminum conductors, with the appropriate insulation class, intended for high-voltage transmission.

The type of cable is selected based on the conditions of installation and further operation: in the ground (cable duct), open in the room, open in the street, taking into account external factors and the environment.

The cable for connecting the VFD AT27 to the mains must be selected based on the transformer power, taking into account overloads and protection settings, as well as with the required reserve coefficient and in accordance with the requirements of local standards.

The cable for connecting the VFD AT27 to the electric motor should be selected based on the power of the electric motor, taking into account overloads, protection settings and reserve coefficient.

Cable cross-sections are selected based on heating conditions, laying and economic current density.

Terminate cable cores with lugs of the same metal.

WARNING! Do not use aluminum lugs to terminate copper conductors!

11.5. Power circuits mounting

11.5.1 Power circuits mounting of AT27 ED line

The power cable is connected to the input terminals of the power transformer or the terminal block, and the motor power cable is connected to the output terminals of the VFD as shown in the figure below.

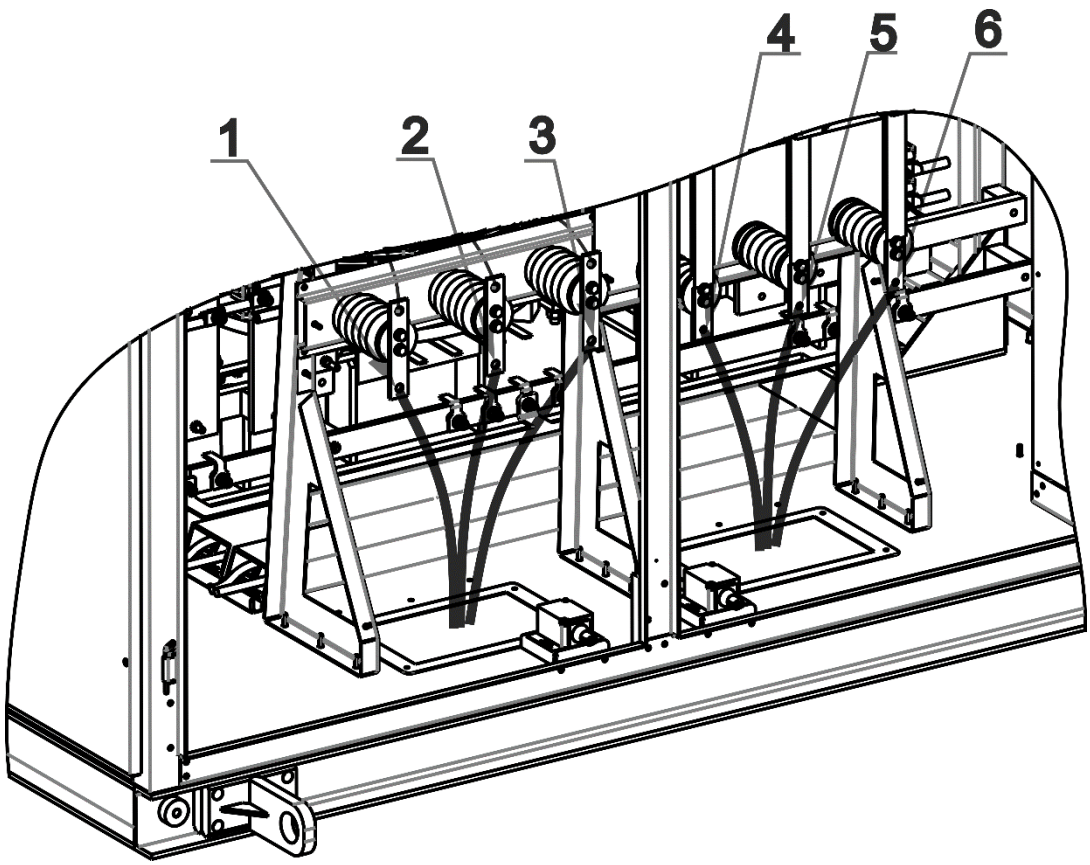

Connecting power cables of the VFD AT27 ED line

1 - output phase U, 2 - output phase V, 3 - output phase W, 4 - input phase A, 5 - input phase B, 6 - input phase C

The cables must be connected in the following sequence:

- Access the input terminals of the transformer and the output terminals of the VFD. Depending on the version, the input connection terminals in the transformer cabinets can be located both on the front side of the transformer and behind the bushing shed of the transformer. To access the terminals, it is necessary to remove the hatch provided for connecting the cables by removing the polyamide screws with a screwdriver with a PH2 attachment;
- Cut holes in the sealing rubber of the entrance hatch with a knife, corresponding to the cable diameters, so that the rubber tightly crimps the cable and pass the cables through the holes;
- Cut the end of the cable to the length required for connection, taking into account the requirements of the instructions for preparing this cable for installing the coupling and connecting to electrical equipment;
- Terminate the cable with a sleeve; terminate the conductors with cable lugs. Cutting of cables and installation of cable glands must be carried out outside the cabinet by pulling the cable out so that when the sleeve warms up, it does not damage the electrical equipment of the cabinet;
- Connect the input cable to the terminals of the power transformer;
- Connect the power cable of the electric motor to the output terminals of the VFD;

- Fix the cables with brackets located near the cable entry hatch and inside the VFD housing along the cable routing path.
- In the VFD AT27 cabinets, brackets are provided for fixing input, output cables and cables passing in transit through the switching cabinets. Examples of fixing power cables are shown in the figure below.

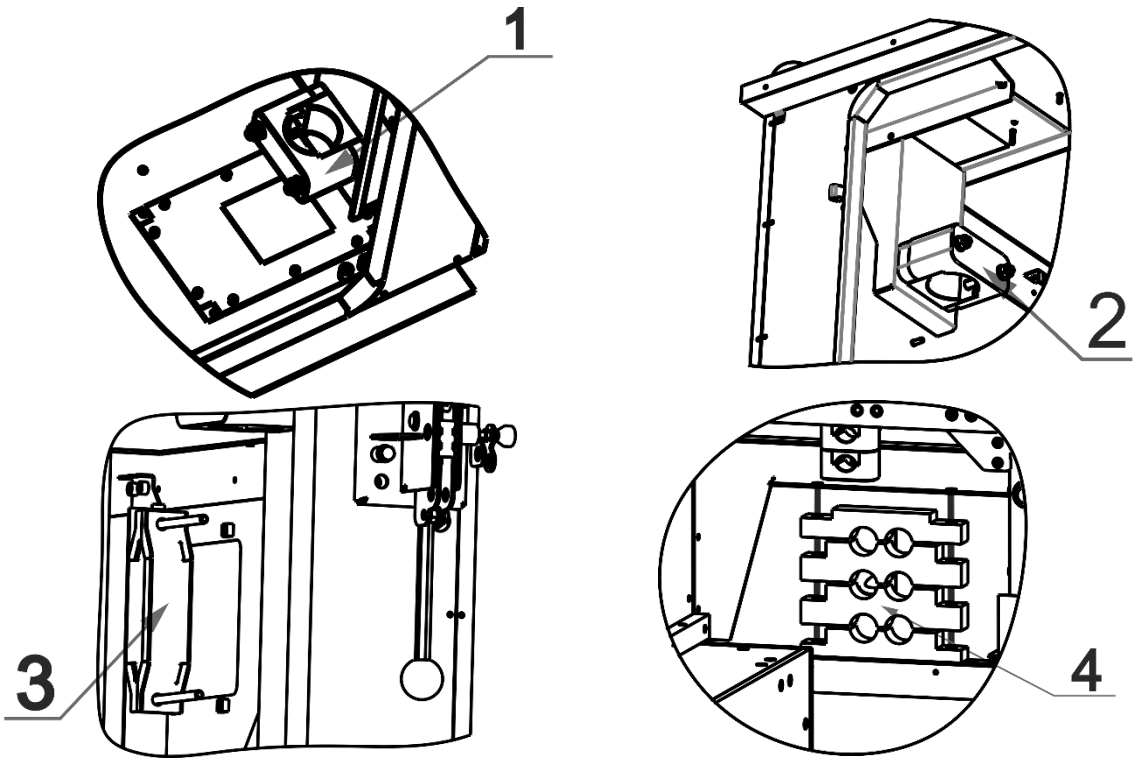

Examples of fixing power cables in a high-voltage switching cabinet.

1 – Brackets for fastening cables entering through the bottom of the cabinet;

2 – Brackets for fastening cables entering through the cabinet roof;

3 – Bracket for fastening cables entering from the side of the cabinet;

4 – Brackets for fastening cables passing through the cabinet.

If the AT27 item consists of two cabinets, a transformer cabinet and a power cell cabinet, after mechanical connection of the cabinets, it is necessary to install jumpers from the supplied mounting kit, connecting the secondary windings of the transformer with the power cells, as it is shown in the figure below. Busbars have an alphanumeric marking according to the marking of the output windings of the power transformer. The busbars should be installed in accordance with the inter-cabinet connection diagram supplied as part of the accompanying documentation.

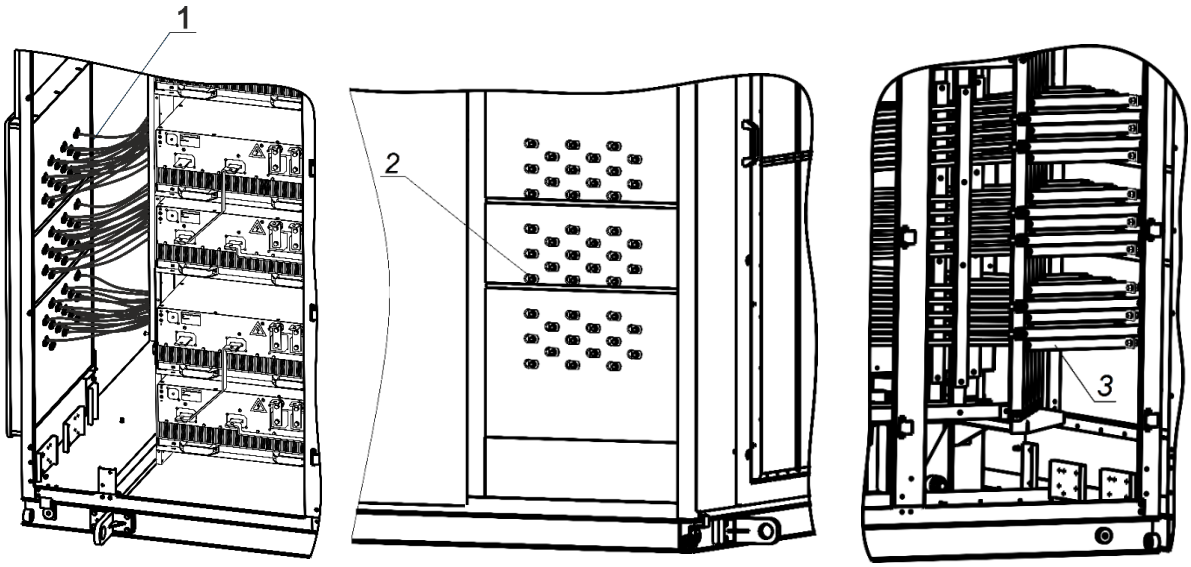

Connection of the secondary windings of the power transformer to the power cells.

1 – Power supply cables of power cells in the power cell cabinet;

2 – Busbar connection terminals on the outer wall of the power cells cabinet;

3 – Installed busbar jumpers; connection of power cells to the secondary windings of the transformer.

WARNING! When installing busbar jumpers, it is not allowed to rotate the busbars relative to the counter lugs of the terminal panel and touch the pins of the terminal panel of the transformer with the cable insulation**!**

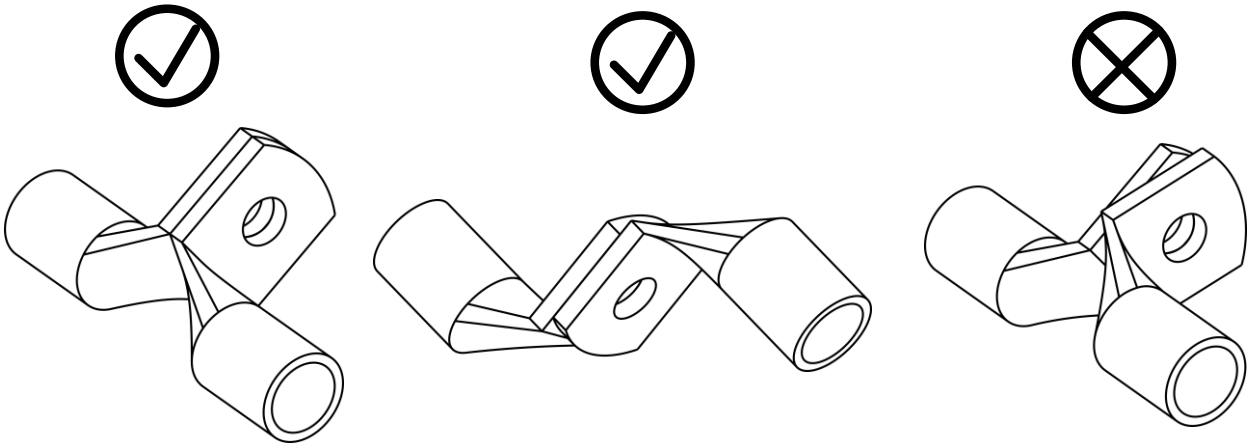

Connection of terminal lugs

If the delivery set includes CB27 high-voltage switching cabinets, the power cable is connected to the terminals of the input compartment of the CB27 switching cabinet, the motor cable must be connected to the terminals of the output compartment of the CB27 switching cabinet.

Cable entry into switching cabinets with the option of increased protection of the casing against ingress of IP42; cable entry is carried out through hermetic entries located on the roof or at the bottom of the cabinet.

If only the CB27 output filter cabinet is included in the delivery set, then the VDF power cables are connected to the input terminals of the power transformer, and the motor power cable is connected to the output terminals of the output filter cabinet.

The figure shows an example of connecting the input and output cables to the CB27-10/630/110-43 cabinet.

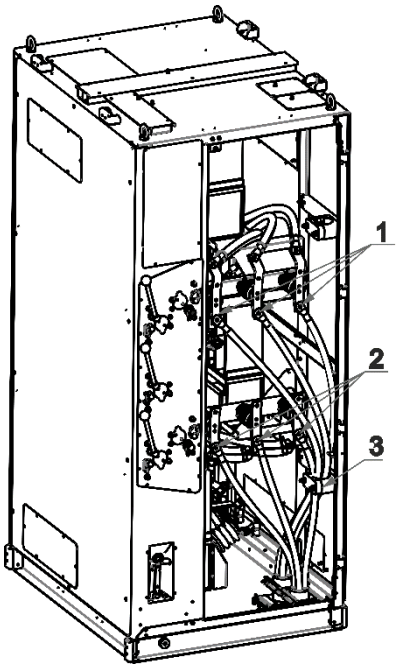

1- connect the output cable;
2- connect the input cable.
3- cable clamp.

Connecting power cables in the CB27-10/630/110-43 cabinet

When connecting cables, it is necessary to observe the phasing according to the color and letter marking of the busbars.

In CB27 cabinets, it is possible to enter power cables from above. In this case, for laying cables in switching cabinets, the walls are provided with brackets for fixing the cable. The cable is cut and wired as described above.

11.5.2. Power circuits mounting of AT27 DD, MV lines

Connect cables in the following sequence:

- Remove the hatch covers of the power circuit compartment;

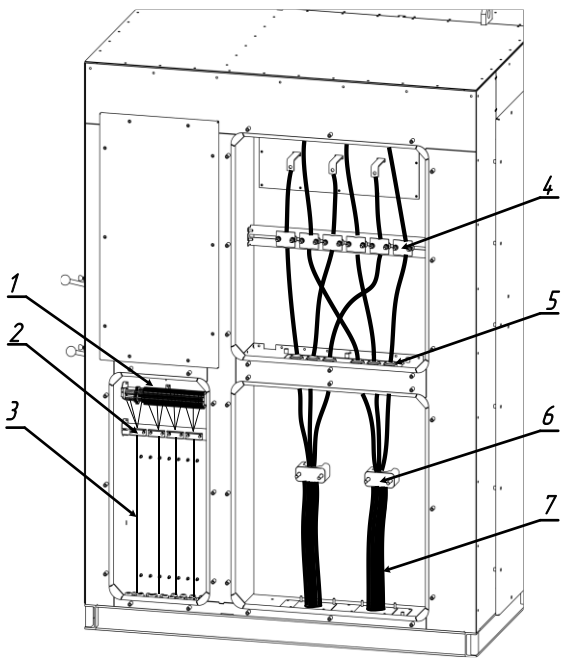

Bottom entry

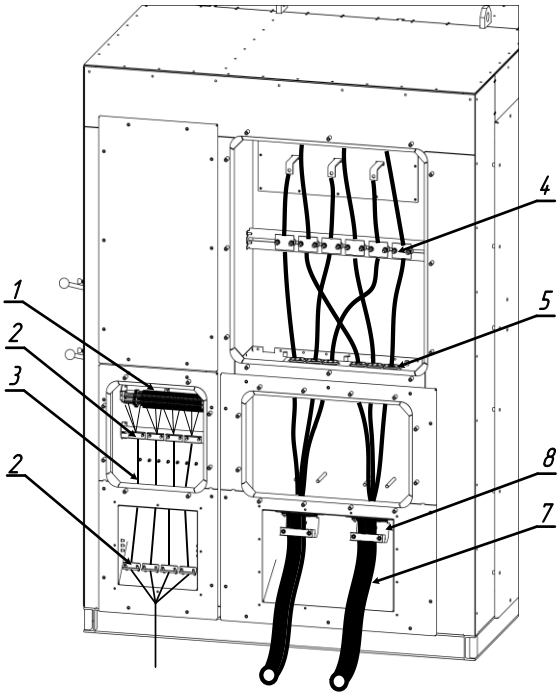

Side entry

1 - Signal connection terminals; 2 – Cable clamps; 3 – Signal cables and MV power cables; 4 – cable clamp; 5 - sealed entry; 6 – Power cable clamps; 7 – Power cable; 8 – Cable entry clamp.

- Insert the power cables through the installed glands and fix with brackets on the installed supports;
- Cut the cable ends to the length required for connection, taking into account the requirements of the instructions for preparing this cable for installing the coupling and connecting to electrical equipment;
- Terminate the cables with a sleeve; terminate the conductors with cable lugs. Cutting of cables and installation of cable glands must be carried out outside the cabinet by pulling the cable out so that when the sleeve warms up, it does not damage other cables and the cabinet paintwork;
- Connect the VFD power cable to the input terminals XT1: A; XT2: B; XT3: C;
- Connect the power cable of the electric motor to the output terminals XT4: U; XT5: V; XT6: W;
- Ground the screens of the couplings.

In the VFD AT27 cabinets, brackets are provided for fixing input, output cables and cables passing in transit through the switching cabinets. Examples of fixing power cables are shown in clause 6.5.1.

If the delivery set includes CB27 switching cabinets, the power cable is connected to the terminals of the input compartment of the CB27 switching cabinet, the motor cable must be connected to the terminals of the output compartment of the CB27 switching cabinet.

Cable entry into switching cabinets with the option of increased protection of the enclosure against ingress of IP54 is carried out through hermetic glands located on the roof or at the bottom of the cabinet.

The figure shows the connection of input and output cables to the CB27-10/630/100-41 cabinet.

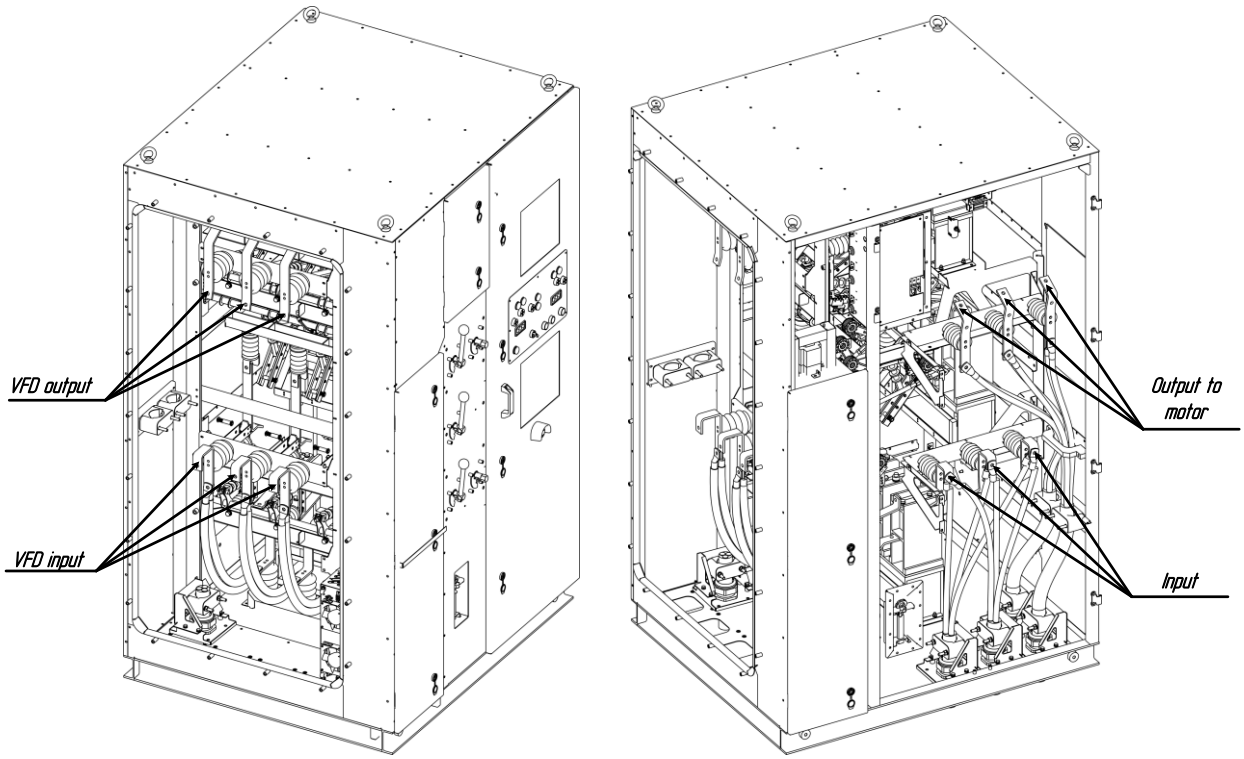

Connecting power cables in the CB27-10/630/100-41 cabinet

When connecting cables, it is necessary to observe the phasing according to the color and letter marking of the busbars.

In CB27 cabinets, it is possible to enter power cables from above. In this case, for laying cables in switching cabinets, the walls are provided with brackets for fixing the cable. The cable is cut and wired as described above.

11.6 Control system cable selection

The power supply cable for the auxiliary needs of the VDF must have copper conductors with a cross section of at least 4 ... 6 mm2. The cable must be rated for an operating voltage of at least 660 V.

The type of cable is selected based on the conditions of installation and further operation: in the ground (cable duct), open in the room, open in the street, taking into account external factors and the environment.

Cable cross-sections are selected taking into account the requirements of the Regulations for Electrical Installation, Chapter 1.3 for heating conditions, laying conditions and economic current density.

Control and signal cables must be screened with copper conductors with a cross-section of up to 1.5 mm^2 and an operating voltage of at least 660 V.

11.7. Wiring of auxiliary AC27 power supply

The power supply of the control system of the VFD is carried out from an external source of 380 V.

The brand of the cable for connecting the auxiliary power supply is selected based on the laying conditions. In general, for indoor and outdoor installation, we recommend using a cable with copper conductors of the required cross-section.

To connect the auxiliary power cable, the XT10 terminal block is installed in the VFD ED and XT10_U line, in the VFD DD and MV line in the control compartment, which is designed to connect a 2.5 - 6 mm^2 cable.

Recommended cross-section of cables for auxiliary power supply for the VFD AT27 is specified in Appendix 3.

The VDF is connected according to the network diagram with a solidly grounded or effectively grounded neutral four-core copper cable with conductors L1, L2, L3, N.

11.8. Selection of control system cables

The type of cable is selected based on the conditions of installation and further operation: in the ground (cable duct), open in the room, open in the street, taking into account external factors and the environment.

Control and signal cables must be screened with copper conductors with a cross section of 0.75 to 2.5 mm^2 and an operating voltage of at least 660 V.

11.9 Installation of control wiring

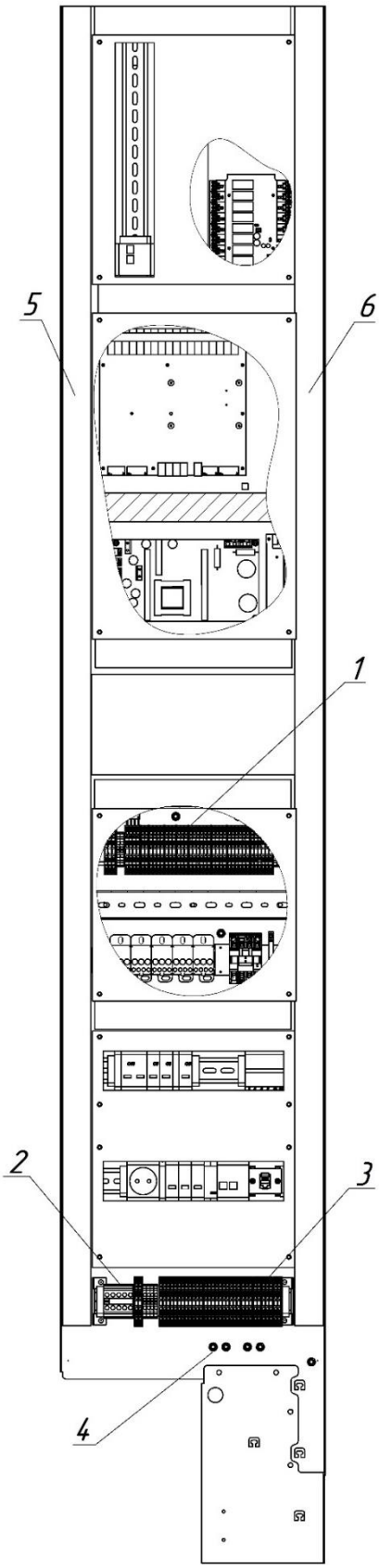

The auxiliary power cable, control cables and signal cables, depending on the design of the VFD, are introduced into the control compartment through hermetic inputs located in the bottom or in the roof of the control compartment.

Terminal blocks for connecting auxiliary power cables, user and interface signals are located in the lower part of the control system compartment.

The cable is cut with a reserve of cores along the length for the possibility of repeated stripping and connection.

After stripping, the cable cores must be marked according to the E5 external connection diagram on both sides. After installation, each cable must be marked with tags or in another way according to the external connection diagram E5 on both sides.

The ends of multicore cables must be terminated with tubular lugs.

Control cables must be screened with screen grounding on the Customer's side or in the control system compartment.

After connection, the cables are fixed with clamps on the brackets provided for this.

General view of the control system compartment is shown in the figure. The inter-cabinet connections are made to the terminal block located in the upper part of the cabinet, pos. 1.

Inter-cabinet connections are made with wires and cables in accordance with the E4 inter-cabinet connection diagram, which is included in the accompanying documentation for the product.

The 0.4 kV auxiliary power cable is connected to the XT10_U terminal block, pos. 2.

When connecting to a network with an isolated neutral point, it is necessary to dismantle the jumper between the neutral point and ground buses in the control system compartment.

The external signal cables are connected to the terminal blocks pos. 3 according to the external connection diagram E5, Appendix 1.

The laid cables are fixed with brackets pos. 4.
220/380V cables must be laid separately from signal and control cables. In general, when entering from above, cables with a voltage of 220/380V are laid in the box along the left wall of the control system compartment, pos. 5, and signal cables and control cables, along the right wall in the box, pos. 6.

Wires and control system cables to the CB27 switching cabinets are laid on the roofs of cabinets in cable channels pos.1, as shown in the figure below. Cables with a voltage of 220 V and 24 V are laid in different boxes.

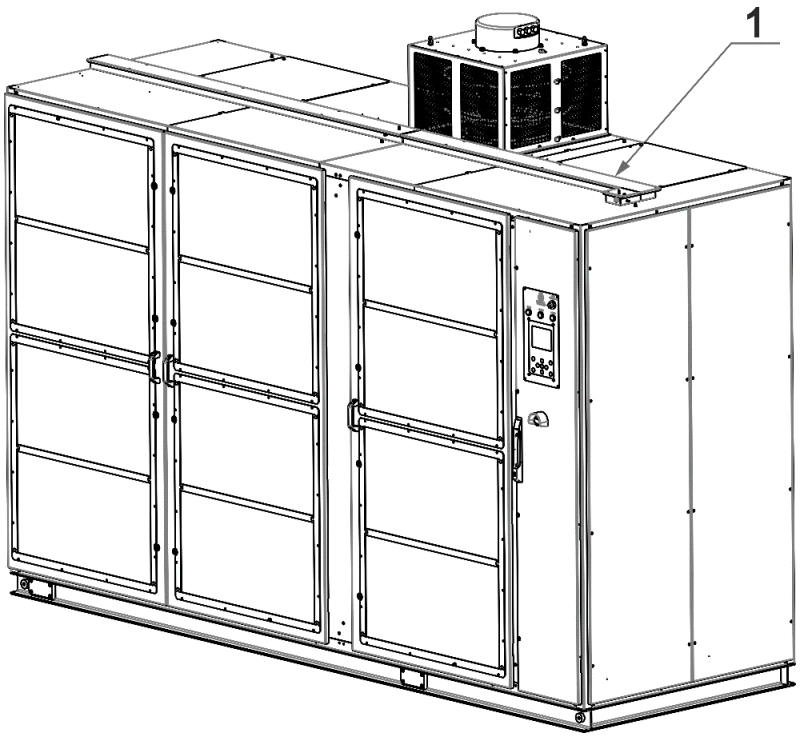

The purpose of terminals of the control system compartment is described in Appendix 1.

11.10. Wiring of communication interface circuits RS485

Lay the RS485 interface circuits only with a specialized twisted-pair cable with copper conductors and a screen with a characteristic impedance of 120 Ohm at a frequency of 1 MHz.

The cable screen must be connected to the protective ground of the device at the receiver side.

When installed in intermediate connectors/terminal blocks, cable screens connected to this connector/terminal block on both sides must be inseparable or connected through this connector/terminal block.

The ends of the cable lines connected to the end devices must be terminated with 120 Ohm terminal resistors.

The RS485 interface cable should, if possible, be laid separately from other cables.

When crossing interface circuits and signal cables, the crossing angle of the cables must be as close as possible to 90°.

When laying interface circuits in parallel with power circuits, the distance between them should be at least 200 mm.

The cut length of the cable must not exceed 50 mm.

12. Pre-operational check-up

The VFD AT27 complies with the safety requirements IEC 60050-195 "Grounding and protection against electric shock", IEC 60227-4 "PVC insulated cables for rated voltage up to 450/750 V inclusive".

Prior to working with the VFD, employees must:

- Undergo special training and testing of knowledge on the operation of the VFD AT27 and labor protection;
- Undergo a preliminary (upon admission) and periodic (during employment) medical examination;
- Undergo a briefing on the issues of labor protection.

Before connecting to the VFD, the following must be done:

- Checking the serviceability of the switchgear inlet cell;
- Measurement of the insulation resistance of the input power cable;
- Checking the insulation strength of the input power cable of the VFD;
- Measurement of insulation resistance of the output cable of the electric motor power supply;
- Checking the insulation strength of the output cable of the electric motor power supply;
- Measurement of the resistance of the windings of the electric motor;
- Checking the insulation strength of the motor windings;
- Checking the insulation strength of control cables.

13. Warranty and service

13.1. Warranty obligations of the manufacturer

The date of purchase and commissioning of the item must be indicated in the service book. The warranty period for the operation of the equipment is valid only if commissioning is carried out, the maintenance schedule is observed and repairs are carried out by certified specialists in accordance with the requirements of the operational documentation.

The warranty period for the equipment may be extended. The conditions for extending the warranty period are stipulated in the maintenance agreement concluded between the Triol Corporation and the customer. The maintenance service is paid.

During the warranty period of the equipment operation, all work related to the elimination of deficiencies in its functioning, arising from the fault of the manufacturer, is performed by certified specialists free of charge, at the expense of the manufacturer. In case of warranty repair/replacement of inverter units, the warranty is extended only for the unit that has undergone repair/replacement.

The equipment and its components, replaced in the course of warranty service, are not returned to the customer.

The planned maintenance can be amended and supplemented in terms of the composition and frequency of maintenance related to the peculiarities of the equipment operation.

Note: Installation of equipment must be carried out in accordance with the requirements of the Operation Manual and current regulatory documents by organizations that have specialists with experience in performing such work, special equipment and tools. The manufacturer does not bear warranty obligations in the event of equipment failure due to a violation of the installation requirements.

13.2. The customer loses the right to warranty service in the following cases:

In case of violation of the rules and conditions set forth in the Operation Manual and other documentation handed over to the consumer with the item.

In case of violation of the requirements imposed by relevant standards and other regulatory documents.

If the commissioning and maintenance of the equipment were carried out by non-certified specialists or not in accordance with the maintenance regulations given in the service book.

If the service book is not filled.

If the equipment has traces of opening and improper repair, the warranty seals (if any) are damaged.

If any changes are found in the design and electrical circuit of the item.

If the damage (deficiencies) are caused by the non-compliance of the supply networks with standards or technical regulations.

If the defect is caused by connecting loads that exceed the rated parameters of the item.

If the equipment failure is caused by an accident on external devices connected to the equipment.

If the equipment has mechanical damage.

If damage is found caused by exposure to moisture or aggressive environments, high or low temperatures, ingress of foreign objects, substances, animals, and insects inside the product.

If the defect is caused by force majeure, accidents, natural disasters, deliberate or negligent actions of the consumer or third parties.

13.3. False call

During the warranty period, there are cases when the consumer can independently eliminate the defects in the equipment operation (in accordance with the Operation Manual for the user). Service call for troubleshooting in the cases listed below is paid by the consumer:

There is no power supply to the equipment;

Mains voltage adversely affects the normal operation of the equipment;

Unavailability of consumer technological equipment;

Equipment malfunctions were caused by the fault of the maintenance staff;

If the call is made for the purpose of consultation and/or instruction at the place where the equipment is installed;

If the call of the Specialist's representative is not related to the operation of the equipment.

13.1 Service center has the right to refuse free warranty service of the equipment in the following cases:

If the equipment is operated in violation of the requirements of the operational documentation.

If the terms of maintenance were not met for more than 30 (thirty) days or the consumer refuses to pay the cost of maintenance.

If the service life of the equipment has exceeded the warranty period specified in clause 1.1 of the service book.

Consultations on the installation, commissioning and operation of the VFD AT27 and the equipment included in the delivery set can be obtained online through the WhatsApp application using the QR code.

QR – service code

Manufacturer's contacts:

Website: https://triolcorp.com/

Appendix 1

External wiring diagram

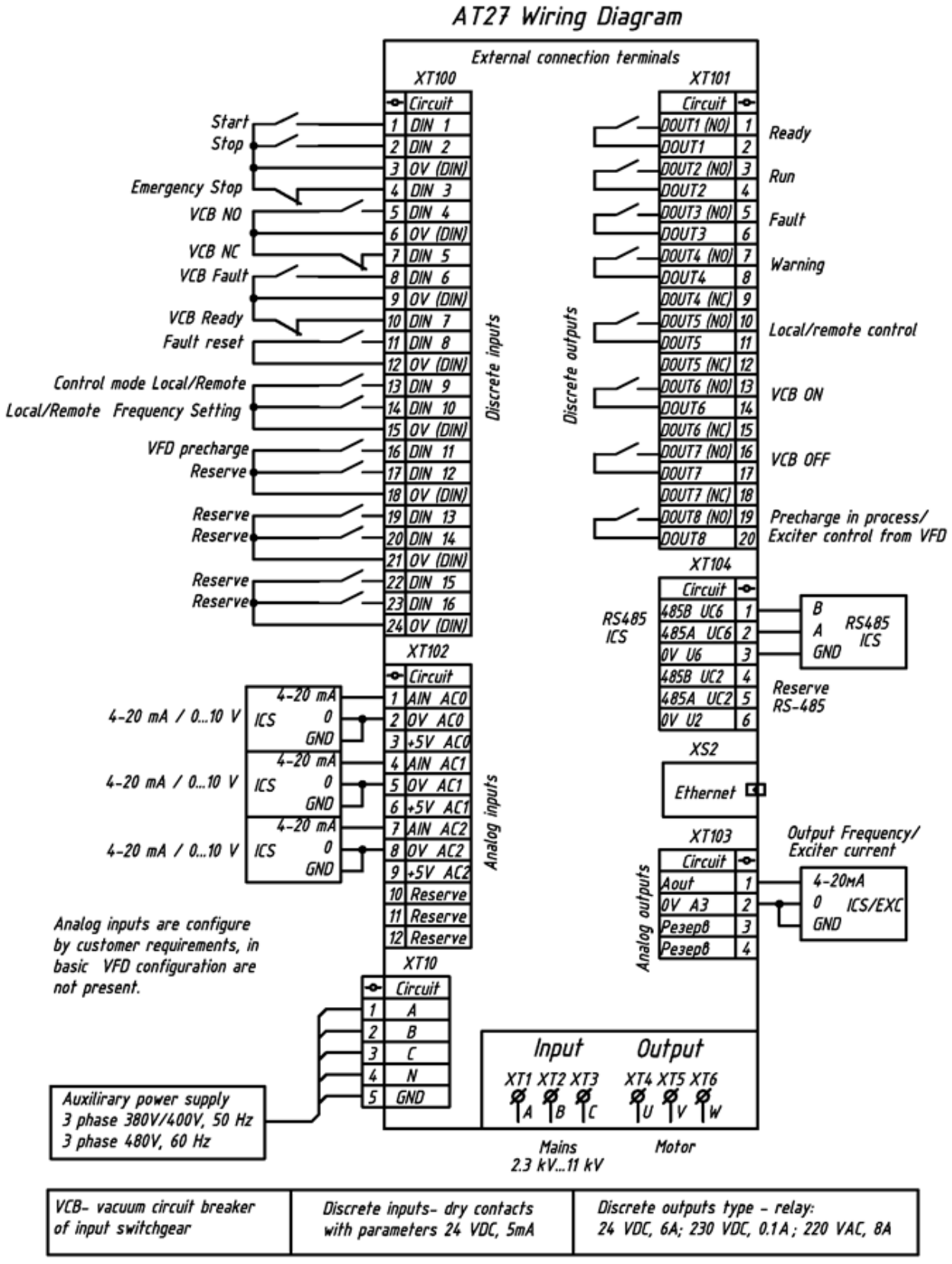

Appendix 2. Mass dimensions

Table 2.1 - Mass and dimensions of the VFD AT27 ED line for a rated voltage of 3.3 kV

Rated power, kW	Dimension, mm			Weigh, Kg
	Width	Height	Depth	
160	2100	2300 (2600)	1250	2500
200	2100	2300 (2600)	1250	2600
250	2100	2300 (2600)	1250	2800
320	2100	2300 (2600)	1250	3000
400	2300	2300 (2820)	1250	3300
500	2300	2300 (2820)	1250	3500
630	2300	2300 (2820)	1250	3750
800	3000	2300 (2820)	1350	4000
1000	3000	2300 (2820)	1350	4200
1250	3750	2300 (2820)	1400	4400
1400	3750	2300 (2820)	1400	4650
1600	3750	2300 (2820)	1400	4900
2000	3750	2300 (2820)	1400	5100
2500	6000	2300 (2820)	1500	5700
3000	6000	2300 (2820)	1500	6500

The weight and dimensions of the VFD AT27 can be changed, check with the manufacturer.

Table 2.2 - Mass and dimensions of the VFD AT27 ED line for a rated voltage of 4.16 kV

Rated power, kW	Dimension, mm			Weigh, Kg
	Width	Height	Depth	
160	2100	2300 (2600)	1250	2300
200	2100	2300 (2600)	1250	2600
250	2100	2300 (2600)	1250	2800
320	2300	2300 (2820)	1250	3000
400	2300	2300 (2820)	1250	3300
500	2500	2300 (2600)	1450	3500
630	2500	2300 (2600)	1450	3750
800	2500	2300 (2600)	1450	4000
1000	2500	2300 (2820)	1450	4200
1250	3740	2300 (2820)	1400	4400
1400	3740	2300 (2820)	1400	4650
1600	3740	2300 (2820)	1400	4900
2000	3740	2300 (2820)	1400	5100
2500	3740	2300 (2820)	1400	5700
3000	6000	2300 (2820)	1500	6500
3200	6000	2300 (2820)	1500	6700
3500	6100	2300 (2820)	1500	7100

The weight and dimensions of the VDF AT27 can be changed, check with the manufacturer.

Table 2.3 - Mass and dimensions of the VFD AT27 ED line for a rated voltage of 6 kV

Rated power, kW	Dimension, mm			Weigh, Kg
	Width	Height	Depth	
200	2100	2300 (2600)	1250	2600
250	2100	2300 (2600)	1250	2800
320	2100	2300 (2600)	1250	3000
400	2100	2300 (2820)	1250	3300
500	2100	2300 (2820)	1250	3500
630	2300	2300 (2820)	1250	3750
800	2300	2300 (2820)	1250	4000
1000	3000	2300 (2820)	1350	4200
1250	3000	2300 (2820)	1350	4400
1400	3750	2300 (2820)	1400	4650
1600	3750	2300 (2820)	1400	4900
2000	3750	2300 (2820)	1400	5100
2500	3750	2300 (2820)	1400	5700
3000	5650	2300 (2820)	1570	6500
3200	5650	2300 (2820)	1570	6700
3500	5650	2300 (2820)	1570	7100
4000	5650	2300 (2820)	1570	8800
4500	5650	2300 (2820)	1570	10600
5000	5650	2300 (2820)	1570	12700

The weight and dimensions of the VDF AT27 can be changed, check with the manufacturer.

Table 2.4 - Mass and dimensions of the VFD AT27 ED line for a rated voltage of 6.6 kV

Rated power, kW	Dimension, mm			Weigh, Kg
	Width	Height	Depth	
200	2100	2300 (2600)	1250	2600
250	2100	2300 (2600)	1250	2800
320	2100	2300 (2600)	1250	3000
400	2300	2300 (2820)	1250	3300
500	3000	2300 (2820)	1350	3500
630	3000	2300 (2820)	1350	3750
800	3000	2300 (2820)	1350	4000
1000	3000	2300 (2820)	1350	4200
1250	3750	2300 (2820)	1400	4400
1400	3750	2300 (2820)	1400	4650
1600	3750	2300 (2820)	1400	4900
2000	3750	2300 (2820)	1400	5100
2500	3750	2300 (2820)	1400	5700
3000	6000	2300 (2820)	1500	6500
3200	6000	2300 (2820)	1500	6700
3500	6000	2300 (2820)	1500	7100
4000	6000	2300 (2820)	1500	8800
4500	6000	2300 (2820)	1500	10600
5000	6000	2300 (2820)	1500	12700

The weight and dimensions of the VDF AT27 can be changed, check with the manufacturer.

Table 2.5 - Mass and dimensions of the VFD AT27 ED line for a rated voltage of 10 kV

Rated power, kW	Dimension, mm			Weigh, Kg
	Width	Height	Depth	
320	2100	2300 (2600)	1500	3100
400	2100	2300 (2600)	1500	3450
500	3100	2300 (2600)	1250	3650
630	3100	2300 (2820)	1250	3900
800	3600	2300 (2820)	1250	4150
1000	3600	2300 (2820)	1250	4400
1250	4750	2300 (2820)	1250	4600
1400	4750	2300 (2820)	1250	4850
1600	4750	2300 (2820)	1250	5 100
2000	4750	2300 (2820)	1250	5 350
2500	4750	2300 (2820)	1250	6000
3000	4750	2300 (2820)	1350	6900
3200	4750	2300 (2820)	1350	7100
3500	4750	2300 (2820)	1350	7500
4000	6800	2300 (2820)	1350	8450
4500	6800	2300 (2820)	1350	9800
5000	7700	2300 (2820)	1350	10200
6300	8700	2300 (2820)	1500	12500
8000	9200	2300 (2820)	1500	16200

The weight and dimensions of the VDF AT27 can be changed, check with the manufacturer.

Table 2.6 - Mass and dimensions of the VFD AT27 ED line for a rated voltage of 11 kV

Rated power, kW	Dimension, mm			Weigh, Kg
	Width	Height	Depth	
320	2450	2300 (2820)	1500	3200
400	2450	2300 (2820)	1500	3250
500	3100	2350 (2820)	1250	3850
630	3100	2350 (2820)	1250	4100
800	3600	2350 (2820)	1250	4350
1000	3600	2350 (2820)	1250	4600
1250	4750	2350 (2820)	1250	4800
1400	4750	2350 (2820)	1250	5050
1600	4750	2350 (2820)	1250	5300
2000	4750	2350 (2820)	1250	5650
2500	4750	2350 (2820)	1250	6300
3000	4750	2350 (2820)	1350	7200
3200	4750	2350 (2820)	1350	7400
3500	4750	2350 (2820)	1350	7800
4000	6800	2350 (2820)	1350	8750
4500	6800	2440 (3000)	1350	9800
5000	7700	2350 (2820)	1350	10600
6300	8700	2350 (2820)	1500	13200
8000	9200	2350 (2820)	1500	16600

The weight and dimensions of the VDF AT27 can be changed, check with the manufacturer.

Table 2.7 - Mass and dimensions of the VFD AT27 DD line for a rated voltage of 3.3 kV

Rated power, kW	Dimension, mm			Weigh, Kg
	Width	Height	Depth	
160	3700	2300 / 3000	1600	5200
200	3700	2300 / 3000	1600	5300
250	3700	2300 / 3000	1600	5400
320	3700	2300 / 3000	1740	5 650
400	3700	2300 / 3000	1740	5850
500	3850	2300 / 3000	1740	6100
630	3800	2300 / 3000	1740	7850
800	4500	2300 / 3000	1740	8050
1000	4500	2300 / 3000	1740	8250
1250	4500	2300 / 3000	1740	8450
1400	4500	2300 / 3000	1740	8550
1600	5630	2300 / 3000	2000	8650
2000	5630	2300 / 3000	2000	8850
2500	6860	2300 / 3000	2000	9200
3000	6860	2300 / 3000	2000	9800

The weight and dimensions of the VDF AT27 can be changed, check with the manufacturer.

Table 2.8 - Mass and dimensions of the VFD AT27 DD line for a rated voltage of 4.16 kV

Rated power, kW	Dimension, mm			Weigh, Kg
	Width	Height	Depth	
160	3700	2300 / 3000	1600	5200
200	3700	2300 / 3000	1600	5300
250	3700	2300 / 3000	1600	5400
320	3700	2300 / 3000	1740	5650
400	3700	2300 / 3000	1740	5850
500	3850	2300 / 3000	1740	6100
630	3850	2300 / 3000	1740	7850
800	4500	2300 / 3000	1740	8050
1000	4500	2300 / 3000	1740	8250
1250	4500	2300 / 3000	1740	8 450
1400	4500	2300 / 3000	2000	8550
1600	4500	2300 / 3000	2000	8650
2000	5630	2300 / 3000	2000	8850
2500	5630	2300 / 3000	2000	9200
3000	6860	2300 / 3000	2000	9800
3200	6860	2300 / 3000	2000	
3500	6860	2300 / 3000	2000	

The weight and dimensions of the VDF AT27 can be changed, check with the manufacturer.

Table 2.9 - Mass and dimensions of the VFD AT27 DD line for a rated voltage of 6 kV

Rated power, kW	Dimension, mm			Weigh, Kg
	Width	Height	Depth	
200	3700	2300 / 3000	1740	4000
250	3700	2300 / 3000	1740	4200
320	3700	2300 / 3000	1740	4600
400	3700	2300 / 3000	1740	5200
500	3700	2300 / 3000	1740	5400
630	3700	2300 / 3000	1740	6850
800	3700	2300 / 3000	1740	8400
1000	4350	2300 / 3000	1740	8600
1250	4350	2300 / 3000	1740	9000
1400	5150	2300 / 3000	1740	9100
1600	5150	2300 / 3000	2000	9200
2000	5150	2300 / 3000	2000	9400
2500	5150	2300 / 3000	2000	10000
3000	6950	2300 / 3000	2000	10800
3200	6950	2300 / 3000	2000	11100
3500	6950	2300 / 3000	2000	11600
4000	6950	2300 / 3000	2000	12700

The weight and dimensions of the VDF AT27 can be changed, check with the manufacturer.

Table 2.10 - Mass and dimensions of the VFD AT27 DD line for a rated voltage of 6.6 kV

Rated power, kW	Dimension, mm			Weigh, Kg
	Width	Height	Depth	
200	3700	2300 / 3000	1740	4100
250	3700	2300 / 3000	1740	4300
320	3700	2300 / 3000	1740	4700
400	3700	2300 / 3000	1740	5350
500	3700	2300 / 3000	1740	5550
630	3700	2300 / 3000	1740	7000
800	3700	2300 / 3000	1740	8550
1000	4350	2300 / 3000	1740	8800
1250	4350	2300 / 3000	1740	9200
1400	5150	2300 / 3000	1740	9300
1600	5150	2300 / 3000	2000	9400
2000	5150	2300 / 3000	2000	9600
2500	5150	2300 / 3000	2000	10200
3000	6950	2300 / 3000	2000	11100
3200	6950	2300 / 3000	2000	11400
3500	6950	2300 / 3000	2000	11900
4000	6950	2300 / 3000	2000	13050

The weight and dimensions of the VDF AT27 can be changed, check with the manufacturer.

Table 2.11 – Mass and dimensions of the VFD AT27 DD line for a rated voltage of 10 kV

Rated power, kW	Dimension, mm			Weigh, Kg
	Width	Height	Depth	
320	3800	2300 / 3000	1740	5000
400	3800	2300 / 3000	1740	5600
500	4400	2300 / 3000	1740	5800
630	4400	2300 / 3000	1740	6000
800	4400	2300 / 3000	1740	6200
1000	4400	2300 / 3000	1740	6400
1250	4400	2300 / 3000	1740	8300
1400	4400	2300 / 3000	1740	8400
1600	5500	2300 / 3000	2000	8500
2000	5500	2300 / 3000	2000	8700
2500	7250	2300 / 3000	2000	9200
3000	7250	2300 / 3000	2000	9700
3200	7250	2300 / 3000	2000	10000
3500	7250	2300 / 3000	2000	10500
4000	7250	2300 / 3000	2000	11500

The weight and dimensions of the VDF AT27 can be changed, check with the manufacturer.

Table 2.12 – Mass and dimensions of the VFD AT27 DD line for a rated voltage of 11 kV

Rated power, kW	Dimension, mm			Weigh, Kg
	Width	Height	Depth	
320	3800	2300 / 3000	1740	5000
400	3800	2300 / 3000	1740	5600
500	4400	2300 / 3000	1740	5800
630	4400	2300 / 3000	1740	6000
800	4400	2300 / 3000	1740	6200
1000	4400	2300 / 3000	1740	6400
1250	4400	2300 / 3000	1740	8300
1400	4400	2300 / 3000	1740	8400
1600	5500	2300 / 3000	2000	8500
2000	5500	2300 / 3000	2000	8700
2500	7760	2300 / 3000	2000	9200
3000	7760	2300 / 3000	2000	9700
3200	7760	2300 / 3000	2000	10000
3500	7760	2300 / 3000	2000	10500
4000	7760	2300 / 3000	2000	11500

The weight and dimensions of the VDF AT27 can be changed, check with the manufacturer.

Table 2.13 – Mass and dimensions of the VFD AT27 MV line for a rated voltage of 3.3 kV

Rated power, kW	Dimension, mm			Weigh, Kg
	Width	Height	Depth	
160	4850	2300	1500	5200
200	4850	2300	1500	5300
250	4850	2300	1500	5400
320	4850	2300	1500	5650
400	4850	2300	1500	5850
500	4850	2300	1500	6100
630	5800	2300 (2720)	2100	7850
800	5800	2300 (2720)	2100	8050
1000	5800	2300 (2720)	2100	8250
1250	5800	2300 (2720)	2100	8450
1400	5800	2300 (2720)	2100	8550
1600	5800	2300 (2720)	2100	8650
2000	5800	2300 (2720)	2100	8850
2500	6800	2300 (2720)	2100	9200
3000	6800	2300 (2720)	2100	9800

The weight and dimensions of the VDF AT27 can be changed, check with the manufacturer.

Table 2.14 – Mass and dimensions of the VFD AT27 MV line for a rated voltage of 4.16 kV

Rated power, kW	Dimension, mm			Weigh, Kg
	Width	Height	Depth	
160	4850	2300	1500	5200
200	4850	2300	1500	5300
250	4850	2300	1500	5400
320	4850	2300	1500	5650
400	4850	2300	1500	5850
500	4850	2300	1500	6100
630	5800	2300 (2720)	2100	7850
800	5800	2300 (2720)	2100	8050
1000	5800	2300 (2720)	2100	8250
1250	5800	2300 (2720)	2100	8450
1400	5800	2300 (2720)	2100	8550
1600	5800	2300 (2720)	2100	8650
2000	5800	2300 (2720)	2100	8850
2500	6800	2300 (2720)	2100	9200
3000	6800	2300 (2720)	2100	9800

The weight and dimensions of the VDF AT27 can be changed, check with the manufacturer.

Table 2.15 – Mass and dimensions of the VFD AT27 MV line for a rated voltage of 6 kV

Rated power, kW	Dimension, mm			Weigh, Kg
	Width	Height	Depth	
200	5850	2300 (2720)	2100	4000
250	5850	2300 (2720)	2100	4200
320	5850	2300 (2720)	2100	4600
400	5850	2300 (2720)	2100	5200
500	5850	2300 (2720)	2100	5400
630	6100	2300 (2720)	2100	6850
800	6100	2300 (2720)	2100	8400
1000	6100	2300 (2720)	2100	8600
1250	6650	2300 (2720)	2100	9000
1400	6650	2300 (2720)	2100	9100
1600	6650	2300 (2720)	2100	9200
2000	6650	2300 (2720)	2100	9400
2500	6650	2300 (2720)	2100	10000
3000	7500	2300 (2720)	2100	10800
3200	7500	2300 (2720)	2100	11100
3500	7500	2300 (2720)	2100	11600
4000	7500	2300 (2720)	2100	12700

The weight and dimensions of the VDF AT27 can be changed, check with the manufacturer.

Table 2.16 – Mass and dimensions of the VFD AT27 MV line for a rated voltage of 6.6 kV

Rated power, kW	Dimension, mm			Weigh, Kg
	Width	Height	Depth	
200	5850	2300 (2720)	2100	4100
250	5850	2300 (2720)	2100	4300
320	5850	2300 (2720)	2100	4700
400	5850	2300 (2720)	2100	5350
500	5850	2300 (2720)	2100	5550
630	6100	2300 (2720)	2100	7000
800	6100	2300 (2720)	2100	8550
1000	6100	2300 (2720)	2100	8800
1250	6650	2300 (2720)	2100	9200
1400	6650	2300 (2720)	2100	9300
1600	6650	2300 (2720)	2100	9400
2000	6650	2300 (2720)	2100	9600
2500	6650	2300 (2720)	2100	10200
3000	7500	2300 (2720)	2100	11100
3200	7500	2300 (2720)	2100	11400
3500	7500	2300 (2720)	2100	11900
4000	7500	2300 (2720)	2100	13050

The weight and dimensions of the VDF AT27 can be changed, check with the manufacturer.

Table 2.17 – Mass and dimensions of the VFD AT27 MV line for a rated voltage of 10 kV

Rated power, kW	Width			Weigh, kg
	Width	Height	Depth	
320	7000	2300 (2720)	2100	5000
400	7000	2300 (2720)	2100	5600
500	7000	2300 (2720)	2100	5800
630	7450	2300 (2720)	2100	6000
800	7450	2300 (2720)	2100	6200
1000	7450	2300 (2720)	2100	6400
1250	8350	2300 (2720)	2100	8300
1400	8350	2300 (2720)	2100	8400
1600	8350	2300 (2720)	2100	8500
2000	8350	2300 (2720)	2100	8700
2500	8350	2300 (2720)	2100	9200
3000	10000	2300 (2720)	2100	9700
3200	10000	2300 (2720)	2100	10000
3500	10000	2300 (2720)	2100	10500
4000	10000	2300 (2720)	2100	11500

The weight and dimensions of the VDF AT27 can be changed, check with the manufacturer.

Table 2.18 – Mass and dimensions of the VFD AT27 MV line for a rated voltage of 11 kV

Rated power, kW	Dimension, mm			Weigh, Kg
	Width	Height	Depth	
320	7000	2300 (2720)	2100	5000
400	7000	2300 (2720)	2100	5600
500	7000	2300 (2720)	2100	5800
630	7450	2300 (2720)	2100	6000
800	7450	2300 (2720)	2100	6200
1000	7450	2300 (2720)	2100	6400
1250	8350	2300 (2720)	2100	8300
1400	8350	2300 (2720)	2100	8400
1600	8350	2300 (2720)	2100	8500
2000	8350	2300 (2720)	2100	8700
2500	8350	2300 (2720)	2100	9200
3000	10000	2300 (2720)	2100	9700
3200	10000	2300 (2720)	2100	10000
3500	10000	2300 (2720)	2100	10500
4000	10000	2300 (2720)	2100	11500

The weight and dimensions of the VDF AT27 can be changed, check with the manufacturer.

Appendix 3

Cross-section of cable cores

Table 3.1 – Recommended conductor cross-sections of control system, auxiliary power supply and heating system cables

VFD power, MW	Cable cross-section		
	Control system power supply	Auxiliary power supply	Heating system
M20 – 2M5	≥1,5 mm²	2,5 – 4 mm²	2,5 mm²
3M0 – 8M0	≥1,5 mm²	4 – 6 mm²	2,5 mm²

It is recommended to choose a smaller value of the cross-section for lower powers of the VFD.

For cable lengths over 50 m, it is recommended to increase the cross-section by 8%.

TRIOL

ELEGANT AND FUNDAMENTAL
INDUSTRIAL SOLUTIONS

WWW.TRIOLCORP.COM

2020